Public Discussion Draft

# BEPS ACTION 3:

# STRENGTHENING CFC RULES

12 May 2015

OECD
BETTER POLICIES FOR BETTER LIVES

## WORK IN RELATION TO CONTROLLED FOREIGN COMPANY RULES

In July 2013, the *Action Plan on Base Erosion and Profit Shifting*[1] directed the OECD to commence work on 15 actions designed to ensure the coherence of corporate income taxation at the international level.

Action 3 of this plan stresses the need to address base erosion and profit shifting using controlled foreign company (CFC) rules. Many countries already have CFC rules, but these rules do not always counter BEPS in a comprehensive manner. While CFC rules in principle lead to inclusions in the residence country of the ultimate parent, they also have positive spillover effects in source countries because taxpayers have no (or much less of an) incentive to shift profits into a third, low-tax jurisdiction.

Working Party No. 11 (WP11) has considered many options for the design of CFC rules that would prevent base erosion and profit shifting. This discussion draft considers all the constituent elements of CFC rules and breaks them down into the "building blocks" that are necessary for effective CFC rules. Most of these building blocks include draft recommendations. The exception to this is Chapter 5, which deals with the definition of CFC income and which does not include recommendations but instead discusses several possible options. The building blocks include:

- Definition of a CFC
- Threshold requirements
- Definition of control
- Definition of CFC income
- Rules for computing income
- Rules for attributing income
- Rules to prevent or eliminate double taxation

The Committee on Fiscal Affairs (CFA) invites interested parties to send written comments on this consultation document. Comments should be sent by email to CTPCFC@oecd.org by no later than 1 May 2015. Please note that all comments received regarding this consultation draft will be made publicly available. Comments submitted in the name of a collective "grouping" or "coalition", or by any person submitting comments on behalf of another person or group of persons, should identify all enterprises or individuals who are members of that collective, or the person(s) on whose behalf the commentator(s) are acting.

Persons and organisations who submit comments on this consultation document are invited to indicate whether they wish to speak in support of their comments at a public consultation meeting on action 3 that is scheduled to be held in Paris at the OECD Conference Centre on 12 May 2015. Persons selected as speakers will be informed by email.

This consultation meeting will be open to the public and the press. Persons wishing to attend this public consultation meeting will be able to register on line. Due to space limitations, priority will be given to persons and organisations who register first and we reserve the right to limit the number of participants from the same organisations.

This meeting will also be broadcast live on the internet and can be accessed on line. No advance registration will be required for this internet access.

[1] OECD (2013), *Action Plan on Base Erosion and Profit Shifting*, OECD Publishing, available at http://www.oecd.org/ctp/BEPSActionPlan.pdf

*This document does not necessarily reflect consensus views of either the Committee of Fiscal Affairs (CFA) or of WP11 regarding the issues it addresses. Rather it reflects preliminary consideration of the issues since the publication of the Action Plan and seeks to identify issues for public comment. It is considered that stakeholder comments are essential to advancing this work. Specific issues on which comments would be appreciated are identified throughout the document as "Questions for Consultation" and are summarised at the end of the document.*

Some countries have proposed that in addition to CFC rules (which for the purposes of the proposal is described as the "primary rule"), countries could introduce further rules (the "secondary rule") that applied to income earned by CFC s that did not give rise to sufficient CFC taxation in the parent jurisdiction. Such secondary rules would introduce a secondary form of taxation in another jurisdiction (for example the source country of the income earned by the CFC).

Working Party 6 is currently considering several options for special measures in the area of transfer pricing as part of Action Items 8-10, which could be implemented as possible secondary rules. Possible future work on the options to address the tax challenges of the digital economy could also be adapted to be applied as secondary rules. There is a question as to whether any of these options might form the basis for a secondary rule.

The CFA has not yet considered whether this high level proposal should be taken forward.

**TABLE OF CONTENTS**

WORK IN RELATION TO CONTROLLED FOREIGN COMPANY RULES ..... 2

TABLE OF CONTENTS ..... 4

INTRODUCTION ..... 6

CHAPTER 1: POLICY CONSIDERATIONS ..... 8

I. Purpose of CFC rules ..... 8
II. Striking a balance between taxing foreign income and maintaining competitiveness ..... 8
III. Limiting administrative and compliance burdens while not creating opportunities for avoidance.11
IV. CFC rules as preventative measures ..... 12
V. Scope of base stripping ..... 12
VI. Avoiding double taxation ..... 13
VII. CFC rules and transfer pricing ..... 13

CHAPTER 2: DEFINITION OF A CFC ..... 15

I. Recommendations ..... 15
II. Explanation ..... 15

CHAPTER 3: THRESHOLD REQUIREMENTS ..... 19

I. Recommendations ..... 19
II. Explanation ..... 19
A. De minimis threshold ..... 19
B. Anti-avoidance requirement ..... 21
C. Low-tax threshold ..... 21

CHAPTER 4: DEFINITION OF CONTROL ..... 27

I. Recommendations ..... 27
II. Explanation ..... 27
A. Type of control ..... 27
B. Level of control ..... 29

CHAPTER 5: DEFINITION OF CFC INCOME ..... 34

I. General approaches to defining CFC income ..... 35
II. How CFC rules can accurately attribute income that raises BEPS concerns ..... 41
III. Possible approaches ..... 45
A. Categorical approach ..... 45
B. Excess profits approach ..... 47
IV. Should CFC rules apply an entity or transactional approach? ..... 53

CHAPTER 6: RULES FOR COMPUTING INCOME ..... 55

I. Recommendations ..... 55
II. Explanation ..... 55

CHAPTER 7: RULES FOR ATTRIBUTING INCOME ..... 58

I. Recommendations ..... 58

II. Explanation ..... 58
A. Which taxpayers should income be attributed to? ..... 58
B. How much income should be attributed? ..... 59
C. When should the income be included in tax returns? ..... 59
D. How should the income be treated? ..... 60
E. What tax rate should apply to CFC income? ..... 60

CHAPTER 8: RULES TO PREVENT OR ELIMINATE DOUBLE TAXATION ..... 61

I. Recommendations ..... 61
II. Explanation ..... 61
A. Issues with respect to relief for foreign corporate taxes ..... 61
B. Issues with respect to relief for CFC taxation in multiple jurisdictions ..... 62
C. Relief for subsequent dividends and capital gains ..... 63

ANNEX I – DE MINIMIS THRESHOLDS ..... 65

ANNEX II - LOW TAXATION THRESHOLDS ..... 66

ANNEX III - DEFINITIONS OF INSURANCE INCOME ..... 68

ANNEX IV - QUESTIONS FOR CONSULTATION ..... 69

## INTRODUCTION

1. Action Item 3 of the BEPS Action Plan recognises that groups can create low-taxed non-resident affiliates to which they shift income and that these affiliates may be established in low-tax countries wholly or partly for tax reasons rather than for non-tax business reasons.[1] Controlled foreign company ("CFC") rules combat this by enabling jurisdictions to tax income earned by foreign subsidiaries where certain conditions are met. However, some countries do not currently have CFC rules and others have rules that do not always counter BEPS situations in a comprehensive manner. Action Item 3 mandates Working Party 11 (WP 11) to "develop recommendations regarding the design of controlled foreign company rules". The objective is to develop recommendations for CFC rules that are effective in dealing with base erosion and profit shifting.

2. CFC rules have existed in the international tax context for over five decades, and dozens of countries have implemented these rules. This discussion draft considers all the constituent elements of CFC rules and breaks them down into the "building blocks" that are necessary for effective CFC rules. These building blocks would allow countries without CFC rules to implement recommended rules directly and countries with existing CFC rules to modify their rules to align more closely with the recommendations, and they include:

I. Definition of a CFC
II. Threshold requirements
III. Definition of control
IV. Definition of CFC income
V. Rules for computing income
VI. Rules for attributing income
VII. Rules to prevent or eliminate double taxation

3. Before discussing these seven building blocks, this discussion draft first addresses the policy considerations to be considered in the context of Action Item 3. These include some fundamental policy considerations that need to be considered when designing CFC rules such as how to strike a balance between the need to tax foreign income and the need to maintain competitiveness, how to limit administrative and compliance burdens while ensuring that CFC rules are effective, and the avoidance of double taxation. It also considers the role of CFC rules; that is their role as preventative measures, the scope of base stripping prevented by CFC rules, and the interaction between transfer pricing rules and CFC rules. These are all briefly considered in Chapter 1. The following chapters then set out the building blocks. There are also three annexes with tables outlining how existing CFC rules currently address several of the issues addressed in this discussion draft, including how countries de minimis and low-tax thresholds work, and how they define attributable income from insurance.

[1] Non-tax business reasons could include, for example, the availability of employees, increased resources, or a more favourable legal environment. CFC rules are not by definition limited to situations where CFCs are controlled by companies, and jurisdictions may also design CFC rules to apply in situations where individuals control foreign entities.

4. The recommendations discussed in this discussion draft are designed to combat base erosion and profit shifting. It is recognised that some countries design their CFC rules to achieve wider policy objectives. Jurisdictions can choose to adopt CFC rules that apply more broadly than the recommendations as long as these are consistent with other international legal obligations. However, such wider aims are not within the scope of the BEPS Action Plan for CFCs.

5. The work on CFCs is being co-ordinated with the work on other Action Items. The Action Items that are most closely associated with CFC rules include Action Item 1 (addressing the tax challenges of the digital economy – this co-ordination involves working closely with the Task Force on the Digital Economy Liaison Group.), Action Item 2 (hybrid mismatch arrangements), Action Item 4 (interest deductions), Action Item 5 (countering harmful tax practices), Action Items 8-10 (transfer pricing),[2] Action Item 11 (methodologies to collect and analyse data), Action Item 14 (dispute resolution mechanisms), and Action Item 15 (developing a multilateral instrument).

[2] The interaction between CFC rules and the outcomes under Action Items 8-10, as well as transfer pricing rules more generally, will be addressed at the end of the process.

## CHAPTER 1: POLICY CONSIDERATIONS

6. The design of CFC rules intended to combat base erosion and profit shifting raises a number of policy considerations: (i) the purpose of CFC rules, (ii) how to strike a balance between taxing foreign income and maintaining competitiveness, (iii) how to limit administrative and compliance burdens while not creating opportunities for avoidance, (iv) the role of CFC rules as preventative measures, (v) the scope of base stripping prevented by CFC rules, (vi) how to ensure that CFC rules do not lead to double taxation, and (vii) the interaction between CFC rules and transfer pricing rules. These policy issues must be considered in order to develop recommendations for CFC rules.

### I. Purpose of CFC rules

7. CFC rules tax the income of controlled foreign subsidiaries in the hands of resident shareholders. For most countries, they are used to prevent shifting of income either from the parent jurisdiction or from the parent and other tax jurisdictions. Some countries which give more importance to the principle of territoriality do not currently apply CFC rules. For those countries CFC rules would have to be limited to targeting profit shifting. However, where countries have worldwide tax systems, they may also be concerned about long-term deferral and therefore their rules may have broader policy objectives (for example, preventing long-term base erosion rather than only preventing profit shifting).

### II. Striking a balance between taxing foreign income and maintaining competitiveness

8. In designing CFC rules, a balance must be struck between taxing foreign income and the competitiveness concerns inherent in rules that tax the income of foreign subsidiaries. CFC rules raise two primary types of competitiveness concerns. First, jurisdictions with CFC rules that apply broadly may find themselves at a competitive disadvantage relative to jurisdictions without CFC rules (or with narrower CFC rules) because foreign subsidiaries owned by resident companies will be taxed more heavily than locally owned companies in the foreign jurisdiction. This competitive disadvantage may in turn lead to distortions, for instance it may impact on where groups choose to locate their head office or increase the risk of inversions, and it may also impact on ownership or capital structures where groups attempt to avoid the impact of CFC rules.[3] CFC rules can therefore run the risk of restricting or distorting real economic activity. Second, multinational enterprises resident in countries with robust CFC rules may find themselves at a competitive disadvantage relative to multinational enterprises resident in countries without such rules (or with CFC rules that apply to a significantly lower rate or narrower base). This competitiveness concern arises because the foreign subsidiaries of the first MNEs will be subject to a higher effective tax rate on the income of those subsidiaries than the foreign subsidiaries of the second MNEs due to the application of CFC rules, even when both subsidiaries are operating in the same country.

---

[3] There is a perception that robust CFC rules can lead to inversions, that is, that groups will change the residence of the parent company to escape the effect of CFC rules. However, whilst it is likely that CFC rules will increase the risk of inversions, they will not be the only factor and other issues such as tax rate and the general system of taxation (e.g., worldwide or territorial) will also play a role. For this reason inversions, and the rules that some countries have adopted to combat them, are not covered in this discussion draft, but countries may want to consider them as a separate matter.

9. The balance between taxing foreign income and maintaining competitiveness is often discussed in the tax policy literature by referring to the impossibility of achieving both capital export neutrality (CEN) and capital import neutrality (CIN) in the absence of harmonised tax rates. CEN, under which taxes do not distort a domestic taxpayer's decision to invest capital domestically or internationally, requires taxing foreign income at the same rate as domestically earned income. CIN, under which taxes do not favour domestic over foreign investments of capital, requires that income earned from investments in a particular country is taxed at the same rate regardless of the investor's residence.

10. To address these concerns, CFC rules typically exempt so-called "active" income that is, or is more likely to be, linked to real economic activity in the foreign subsidiary and has not been, or is less likely to have been, shifted from the parent company. This approach may not be entirely effective in combatting BEPS, but, in developing recommendations for the design of CFC rules, the balance between taxing foreign income and maintaining competitiveness needs to be kept in mind. Another way to maintain competitiveness would be to ensure that more countries implement similar CFC rules. This is therefore a space where countries working collectively and adopting similar rules could reduce the competitiveness concerns that individual countries may have when considering whether to implement CFC rules. This discussion suggests that competitiveness concerns could be reduced either by designing the output under Action Item 3 as a minimum standard or combining this output with a secondary rule.

11. A particular competitiveness concern may arise in the context of the European Union. Since 2006,[4] it is generally acknowledged that the European Court of Justice's case law imposes limitations on CFC rules that apply within the EU. Therefore, whilst recommendations developed under this Action Item need to be broad enough to be effective in combatting BEPS they also need to be adaptable, where necessary, to enable EU members to comply with EU law. This policy consideration affects all jurisdictions, including those that are not Member States of the EU, because recommendations that are inconsistent with EU law would mean that Member States could not adopt those recommendations to apply within the European Union. This in turn would mean that multinational groups that are based in jurisdictions that are not EU Member States could be at a competitive disadvantage compared to multinational groups that are based in Member States since the latter groups would not be subject to equally robust CFC rules.

12. In *Cadbury Schweppes*[5] and subsequent cases, the European Court of Justice has stated that CFC rules and other tax provisions that apply to cross-border transactions and that are justified by the prevention of tax avoidance must "specifically target wholly artificial arrangements which do not reflect

---

[4] In 2006, the European Court of Justice issued its opinion in Cadbury Schweppes plc and Cadbury Schweppes Overseas Ltd v. Commissioners of Inland Revenue, C-196/04. This case considered the compatibility of Member State CFC rules with the EU treaty freedoms.

[5] Cadbury Schweppes plc and Cadbury Schweppes Overseas Ltd v. Commissioners of Inland Revenue, C-196/04. More recent cases have echoed the decision in *Cadbury Schweppes*. In Itelcar – Automóveis de Aluguer Lda. v. Fazenda Pública, Case C-282/12 (3 October 2013), the ECJ made it clear that a national measure restricting the fundamental EU freedoms may be justified where it specifically targets wholly artificial arrangements which do not reflect economic reality and the sole purpose of which is to avoid the tax normally payable on the profits generated by activities carried out on the national territory. In *Itelcar* the ECJ went on to say that it is apparent from the case-law of the Court that, where rules are predicated on an assessment of objective and verifiable elements for the purposes of determining whether a transaction represents a wholly artificial arrangement entered into for tax reasons alone, they may be regarded as not going beyond what is necessary to prevent tax evasion and avoidance, if, on each occasion on which the existence of such an arrangement cannot be ruled out, those rules give the taxpayer an opportunity, without subjecting him to undue administrative constraints, to provide evidence of any commercial justification that there may have been for that transaction.

economic reality and whose only purpose would be to obtain a tax advantage".[6] The ECJ's jurisprudence applies to all Member States of the EU and the EEA,[7] and it applies when the parent jurisdiction and the CFC jurisdiction are both within the EEA.

13. The purpose of this discussion draft is to set out recommendations for effective CFC rules that can be implemented in all jurisdictions. These recommendations will ideally be the same for EU Member States and non-EU Member States, but this discussion draft acknowledges that, depending on the agreed recommendations, EU Member States may need to modify these recommendations to comply with EU law.[8] Modifications to comply with EU law should only change how CFC rules that apply to other Member States are implemented by Member States of the EU, and they should not change whether they comply with the recommendations outlined in the discussion draft.

14. Although the determination of how to comply with EU treaty freedoms is the decision of each individual EU Member State, in designing CFC rules, EU Member States could potentially consider the following when implementing adaptable and durable CFC rules:

- Including a substance analysis that would only subject taxpayers to CFC rules if the CFCs did not engage in genuine economic activities. Some Member States have already modified their CFC rules so that they do not apply to genuine economic activities and are therefore consistent with their understanding of the ECJ's "wholly artificial arrangements" limitation.

- Applying CFC rules equally to both domestic subsidiaries and cross-border subsidiaries. A CFC rule will only be found inconsistent with the freedom of establishment if the rule itself discriminates against non-residents. This was made clear in *Cadbury Schweppes*, where the ECJ focused on the difference in treatment under UK CFC rules between a UK controlled company and a non-resident controlled company. The Court explained this focus by stating:

  > "*That difference in treatment creates a tax disadvantage for the resident company to which the legislation on CFCs is applicable. Even taking into account […] the fact referred to by the national court that such a resident company does not pay, on the profits of a CFC within the scope of application of that legislation, more tax than that which would have been payable on those profits if they had been made by a subsidiary established in the United Kingdom, the fact remains that under such legislation the resident company is taxed on profits of another legal person. That is not the case for a resident company with a subsidiary taxed in the United Kingdom or a subsidiary established outside that Member State which is not subject to a lower level of taxation*".[9]

  Therefore, if a CFC rule treats domestic subsidiaries the same as cross-border subsidiaries, it arguably should not be treated as discriminatory under the case law of the ECJ, and no

---

6 Haribo Lakritzen Hans Riegel BetriebsgmbH and Österreichische Salinen AG v. Finanzamt Linz, Joined Cases C‑436/08 and C‑437/08, paragraph 165.

7 The ECJ's jurisprudence applies to countries that are not Member States of the European Union to the extent that it interprets the fundamental freedoms protected by the Agreement on the European Economic Area.

8 Countries that are not Member States of the European Union could also implement the modifications adopted by EU Member States.

9 Cadbury Schweppes, paragraph 45.

justification is needed. Such an approach would attribute the allocable income of any controlled company – whether foreign or domestic – to its resident shareholders.[10]

- Applying CFC rules to transactions that are "partly wholly artificial". Even if a direct tax rule in a EU Member State is found to implicate the freedom of establishment and to discriminate, it may still be upheld if it is justified and proportionate. Although earlier CFC cases found CFC rules in EU Member States to be justified and proportionate only if they were limited to wholly artificial arrangements, two more recent developments in the ECJ's analysis suggest that CFC rules may now be justified and proportionate even if they apply beyond wholly artificial arrangements. The first development is that cases have suggested that rules may be justified by the need to prevent tax avoidance if they are targeted at arrangements that are not wholly artificial. In *Thin Cap Group Litigation*, for example, the ECJ stated that, in determining whether thin cap legislation was justified by the need to prevent abusive practices, the Court should determine "whether the transaction in question represents, *in whole or in part*, a purely artificial arrangement, the essential purpose of which is to circumvent the tax legislation of that Member State".[11] This wording suggests that a CFC rule in a EU Member State that targets income earned by a CFC that is not itself wholly artificial may be justified so long as the transaction giving rise to the income is at least partly artificial.

- Designing CFC rules to explicitly ensure a balanced allocation of taxing power. The ECJ has suggested that Member State tax provisions may not be restricted to wholly artificial arrangements if they are justified by a reason other than the need to prevent tax avoidance. In both *SGI*[12] and *Oy AA*,[13] for example, the ECJ stated that the rules in question could be justified notwithstanding the fact that they were not restricted to wholly artificial arrangements because they were justified by the need to maintain a balanced allocation of taxing rights. In *SGI*, the ECJ clarified that this "justification may be accepted, in particular, where the system in question is designed to prevent conduct capable of jeopardising the right of a Member State to exercise its tax jurisdiction in relation to activities carried out in its territory".[14] Although the Court has not yet found that CFC rules are justified by the need to maintain a balanced allocation of taxing rights, these cases suggest that CFC rules could be permitted to apply more broadly if they could be explained by the need for a Member State to tax profits arising from activities carried out in its territory.

## III. Limiting administrative and compliance burdens while not creating opportunities for avoidance

15. A third policy consideration is how to achieve effective rules that do not unduly increase compliance costs and administrative burdens. Although one of the benefits of CFC rules can be their

---

10 At least one jurisdiction already applies such an approach. Denmark's legislation has the effect that there is no different treatment, no matter whether the parent company owns a subsidiary resident in Denmark, a foreign subsidiary resident in the EU/EEA or a foreign subsidiary resident outside the EU/EEA.

11 Test Claimants in the Thin Cap Group Litigation v. Commissioners of Inland Revenue, C-524/04, paragraph 81 (emphasis added).

12 Société de Gestion Industrielle (SGI) v. Belgian State, C-311/08 (21 January 2010) (holding that the freedom of establishment did *not* prevent Member States from requiring profit adjustments in the case of non-arm's length transactions involving non-resident parties).

13 Oy AA, C-231/05 (18 July 2007) (holding that the freedom of establishment did *not* prevent Member States from limiting interest deductions for intra-group transfers to payments made to resident companies).

14 SGI, paragraph 60.

relatively mechanical application, CFC rules that are entirely mechanical may not be as effective as rules that allow more flexibility, and they may not be compatible with EU law for the reasons set out above. However, flexibility can also create uncertainty, which may impact both on the costs of applying and complying with CFC rules. CFC rules must strike a balance between the reduced complexity inherent in mechanical rules and the effectiveness of more subjective rules. This policy consideration is reflected most clearly in rules on defining income. In that context, although an approach that attributes income based purely on its formal classification may reduce administrative and compliance burdens, such an approach may be less effective, and countries with existing CFC rules have generally opted to combine this approach with less mechanical substance analyses to ensure that the income that is attributed in fact arises from base erosion and profit shifting. Concerns about the administrative burden of substance-based rules can, however, be reduced by including suitably targeted entity-level exemptions.

## IV. CFC rules as preventative measures

16. CFC rules are designed to act as a deterrent. In other words, CFC rules are not designed to raise significant revenue in the form of additional corporate taxation. Instead, they are designed to prevent taxpayers from shifting income into CFCs in the first place, and they therefore protect revenue by preventing tax avoidance rather than subjecting parent companies to tax on their CFCs. CFC rules will, of course, raise some revenue by taxing the income of CFCs, but there is likely to be a reduction in the income shifted to CFCs after the implementation of CFC rules.

17. Because CFC rules are designed to change taxpayer behaviour, they may not have the effect that their design suggests. For example, the design of CFC rules suggests that they grant secondary taxing rights to the residence jurisdiction. In reality, however, if CFC rules effectively tax profits at a sufficiently high rate, they may also increase taxing opportunities in source jurisdictions by reducing or eliminating the tax incentives for MNEs to shift income into subsidiaries in low-tax jurisdictions.

## V. Scope of base stripping

18. CFC rules are intended to prevent group companies from shifting income to CFCs, but this does not necessarily mean that CFC rules only protect the base of the parent jurisdiction. Some existing CFC rules do focus only on protecting the parent jurisdiction's base, but others protect against both stripping of the parent jurisdiction's base and stripping of third countries' bases (or "foreign-to-foreign stripping"). Rules that focus on stripping of the parent jurisdiction define CFC income to include only that income that has been diverted or shifted from the parent jurisdiction,[15] while those that focus on foreign-to-foreign stripping include any income that could have been earned in any jurisdiction other than the CFC jurisdiction.

19. Foreign-to-foreign stripping may raise different concerns from stripping of the parent jurisdiction as third countries may have tax rates that are still lower than the parent jurisdiction. Despite this possible difference, however, CFC rules that focus only on parent jurisdiction stripping may not be as effective against BEPS arrangements for two reasons. First, it may not be possible to determine which country's base has been stripped (for example, in the case of stateless income). Second, even if it were possible to

[15] Another way to narrow the focus of CFC rules, with the result that they do not prevent foreign-to-foreign stripping, is to implement rules that allow companies to elect whether their subsidiaries are treated as partnerships or corporations. The rules discussed in Chapter 2, however, are designed to eliminate the effect of such an election for CFC rules and may therefore reduce the availability of this option.

determine which country's base was stripped, the BEPS Action Plan aims to prevent erosion of all tax bases, including those of third countries. This issue is of particular relevance for developing countries.[16]

## VI. Avoiding double taxation

20. An additional consideration is how to avoid double taxation. Since CFC rules subject the income of a foreign subsidiary to taxation in the parent jurisdiction, they can lead to double taxation if the subsidiary is also subject to taxation in the CFC jurisdiction. Double taxation concerns can be limited by incorporating low-tax thresholds, which are discussed in the next section, into CFC rules. Existing CFC rules also seek to prevent double taxation through provisions such as foreign tax credits. These provisions are outlined in the discussion of the seventh building block in Chapter 8.

## VII. CFC rules and transfer pricing

21. Transfer pricing rules are intended to adjust the taxable profits of associated enterprises to eliminate distortions arising whenever the prices or other conditions of transactions between those enterprises differ from what they would have been if the enterprises had been unrelated. If transfer pricing rules were to fully achieve this objective, they would restore the taxing rights of all jurisdictions involved. As with CFC rules, transfer pricing rules often achieve this objective by deterring business from entering into certain arrangements. Because controlled foreign company rules by definition address related parties (as the companies that are captured by such rules are controlled by another party), jurisdictions often also use these rules to combat the adjusted prices charged between related parties. In other words, CFC rules are seen as a way for a parent jurisdiction to capture income earned by a foreign subsidiary that may not have been earned had the original pricing of the income-creating asset been set correctly. CFC rules are thus often referred to as "backstops" to transfer pricing rules.[17] That terminology, however, is misleading, in that CFC rules generally do not complement transfer pricing rules in a coherent manner. Instead, CFC regimes applying a sufficiently high rate of tax may make certain transfer pricing outcomes irrelevant to the MNE by removing the benefit of engaging in transfer pricing manipulation. It is generally therefore not that the *principle* of CFC rules is to capture income from transfer pricing manipulation but that certain CFC provisions may sometimes have this *effect*.

22. CFC rules may target the same income as transfer pricing rules in some situations, but it is unlikely that either CFC rules or transfer pricing rules in practice eliminate the need for the other set of rules. Instead, while CFC rules may capture some income that is not captured by transfer pricing rules (and vice versa), neither set of rules fully captures the income that the other set of rules intends to capture for a number of reasons.

23. Firstly, the type of CFC rule that would most effectively replace transfer pricing rules for transactions within the same control group would be a full-inclusion system. Given a sufficiently high tax rate, such a system, where there is no exemption for income arising from economic activity undertaken by the CFC (and all income is therefore included as attributable CFC income), provides the most complete example of the backstop effect because it removes the benefit to related parties of engaging in transfer pricing manipulation.[18] In fact, full inclusion removes the benefit associated with any type of intragroup

---

16 For more on the effect of Action Item 3 and the other action items on developing countries, see the BEPS Action Plan and the BEPS Report, both of which refer to the knock-on effect of CFC rules on source countries.

17 See, e.g., J. Clifton Fleming, Jr., Robert J. Peroni and Stephen E. Shay, Worse than Exemption, 59 Emory L.J. 79 (2009).

18 See Mitchell A. Kane, Milking versus Parking: Transfer Pricing and CFC Rules under the Internal Revenue Code, 66 Tax Law Review (2013).

arbitrage because all income from such transactions will be taxed at the parent company level under a full-inclusion system. Partial-inclusion systems, particularly those that focus on formal classification of income, often only capture transfer pricing schemes haphazardly, since the determination of which income is attributed for CFC purposes does not align with the determination of what prices should be charged.[19]

24. Secondly, to the extent that CFC rules do not fully deter BEPS, they only restore (or transfer) taxing rights to parent jurisdictions, which are not necessarily the jurisdictions which have suffered the profit shifting.

25. Thirdly, if the tax rate of the parent state is lower than the tax rate applicable to some of the subsidiaries, it will still be advantageous to the MNE to shift profits away from those higher-tax subsidiaries.

26. Fourthly, businesses can avoid the effect of CFC rules by restructuring under companies resident in jurisdictions without CFC rules or with low tax rates while still accessing the same capital markets. Transfer pricing rules, in contrast, can be applied by all countries where economic activity takes place to protect their own tax bases.

27. Finally, even a full-inclusion system would not necessarily capture transfer pricing or arbitrage transactions between related parties that are not in the same control group. Therefore, the fact that CFC rules are limited to parents and their controlled subsidiaries rather than sibling enterprises or other related parties that do not have control over each other means that, even if jurisdictions were to shift to full-inclusion systems, there would still be a need for transfer pricing rules to capture transactions beyond the narrow parent-subsidiary context. In other words, transfer pricing rules are necessary because there are some companies (e.g., those that are not controlled by taxpayers in the jurisdiction implementing CFC rules) that would not be subject to CFC rules because of the scope of such rules.

28. In addition, transfer pricing rules alone will not capture all the income that would be targeted by CFC rules. Whilst both transfer pricing rules and CFC rules can be regarded as preventing the erosion of domestic tax bases, transfer pricing rules do so by focusing on individual transactions between related parties, while CFC rules do so by focusing on profit earned by a controlled party from transactions with a variety of counterparties. The overlap between these two rules is thus not exact, and not all profit earned by foreign subsidiaries that would be captured by CFC rules would be captured by transfer pricing rules. Also, while transfer pricing rules intend to align primary taxing rights with value creation, they are not designed to address the challenges raised by profit shifting to low-tax jurisdictions or stateless income. Effective CFC rules would, however, deter taxpayers from shifting profits into foreign subsidiaries in low-tax jurisdictions or jurisdictions that do not recognise the subsidiary for tax purposes, and they would therefore ultimately complement transfer pricing rules as a backstop. A further reason to have both CFC rules and transfer pricing rules is that this combination provides tax administrations with two different enforcement tools to combat BEPS. Finally, CFC rules are designed to be deterrent measures, which means that they may have the effect of eliminating structures and transactions entirely. The reasons above highlight why both transfer pricing rules and CFC rules may be necessary.

[19] See id.

## CHAPTER 2: DEFINITION OF A CFC

29. The first step in establishing whether CFC rules apply to a foreign subsidiary requires consideration of whether that subsidiary is itself a CFC. The first three building blocks address this question: this building block addresses whether an entity is of the type that would be considered a CFC, the next building block (discussed in Chapter 3) addresses whether the entity was subject to a sufficiently high level of tax to escape CFC taxation, and the third building block (discussed in Chapter 4) addresses whether the parent company has sufficient influence over the foreign entity for the foreign entity to be a CFC.

### I. Recommendations

30. The recommendation is to broadly define entities that are within scope so that in addition to including corporate entities CFC rules would also apply to partnerships, trusts, and permanent establishments (PEs) when those entities are either owned by CFCs or treated in the parent jurisdiction as taxable entities separate from their owners.

31. A further recommendation is to include a modified hybrid mismatch rule that would prevent entities from circumventing CFC rules by being treated differently in different jurisdictions.

### II. Explanation

32. Although CFC rules would appear based on their name only to apply to corporate entities, most countries have a broad definition of which entities can be considered CFCs. Many include trusts, partnerships and PEs to ensure that companies in the parent jurisdiction cannot circumvent CFC rules just by changing the legal form of their subsidiaries, but these entities are only treated as CFCs in limited circumstances.

33. Many transparent entities such as partnerships should not be treated as CFCs to the extent that their income is already taxed in the parent jurisdiction on a current basis. However, CFC rules will apply to transparent entities in two cases. The first case arises when entities that are not taxable in one jurisdiction are subject to taxation in the parent jurisdiction. This would, for example, lead to partnerships being treated as CFCs if they are taxable entities under the laws of the parent jurisdiction. The second case arises when entities that would not otherwise be taxable are owned by another CFC. Since the CFC itself raises the possibility of deferral, and since an entity owned by this CFC may allow for the blending of low and high tax rates that could in turn lead to the avoidance of CFC rules, entities owned by a CFC should also be taken into account, both for calculating income and for determining whether the CFC is subject to low taxation.[20]

[20] The question of blending tax rates is relevant to the low-tax threshold discussion in Chapter 3.

34. Permanent establishments should be taken into account for CFC rules in cases where the residence jurisdiction of the company of which the PE is a part applies the exemption method to the income of the PE.[21]

35. A further issue that arises in determining which entities could be CFCs is how to treat hybrid tax planning. Differences in the way the parent and CFC jurisdiction characterise instruments and entities can result in payments that might otherwise be attributed under CFC rules being ignored or treated as being outside the scope of CFC rules. For example, entity classification rules in the parent jurisdiction can allow the payer and payee in a multinational group to be treated as the same entity for CFC purposes so that a deductible intra-group payment between these entities is not taken into account under the parent's CFC rules. These rules ultimately exclude income that would otherwise be attributable as CFC income and they have this effect because they do not recognise certain entities. To the extent that the payment is deductible in the payer's jurisdiction this implicates foreign to foreign base erosion issues.

36. One way to tackle this issue could be to consider a modified hybrid mismatch rule that requires an intragroup payment to a CFC to be taken into account in calculating the parent company's CFC income.[22] This solution could apply either broadly or narrowly. Under the *narrow option*, an intragroup payment would be taken into account if:

- the payment is base eroding (e.g. deductible in one jurisdiction and subject to a nil or low rate of taxation in the jurisdiction of receipt);
- the payment is not included in CFC income; and
- the payment would have been included in CFC income if the parent jurisdiction had classified the entities and arrangements in the same way as the payer or payee jurisdiction.

37. Such an approach focuses on base eroding payments that exploit conflicts in the classification of instruments and entities in order to produce mismatches in tax outcomes under the CFC rules of the parent jurisdiction. Under the *broad option*, in contrast, an intragroup payment would be taken into account if:

- the payment is not included in CFC income; and
- the payment would have been included in CFC income if the parent jurisdiction had classified the entities and arrangements in the same way as the payer or payee jurisdiction.

38. Such an approach may be more consistent with existing CFC rules since CFC rules typically do not require a payment to be base eroding in order to take account of the payment in calculating the parent company's CFC income. In theory this could potentially subject more income to CFC taxation than is necessary to combat BEPS. However, this may not be the case as the income would ultimately only be attributable if all the other requirements of CFC rules were met. The broad option also re-establishes the coherence of CFC rules since it allows *any* income that would be subject to CFC rules to be taken into account by those rules, rather than only allowing a narrow category of that income to be taken into account.

---

[21] The same applies for countries operating a territorial system where income from foreign PEs of domestic companies is not included in the tax base.

[22] This is not the only way to tackle this issue. A jurisdiction that implements an excess profits approach similar to that described in Chapter 5, for example, may not need an additional rule to address these types of hybrid mismatches if such an approach does not ignore the income earned in situations such as those illustrated in Figure 1.

39. The example below explains how both rules might operate. In the structure illustrated below, A Co, a company resident in Country A, holds all the shares of B Co, a company resident in Country B. B Co, in turn, holds all the shares in C Co, a company resident in Country C. Country A and Country C are high tax jurisdictions while Country B is a low tax jurisdiction. C Co is a disregarded entity for Country A tax purposes. C Co borrows money from B Co, and because C Co is treated as transparent under the laws of Country A, the payment of interest to B Co is ignored under the laws of Country A and therefore not included within the calculation of CFC income for Country A purposes. Note that this example would not currently be caught by the rules designed under Action Item 2 since this payment does not create a hybrid mismatch under the rules of either Country B or Country C, which are the resident jurisdictions of the counterparties. Instead, it only creates a hybrid mismatch for purposes of Country A, which is the country that treats C Co as transparent.

**Figure 1. Modified hybrid mismatch rule**

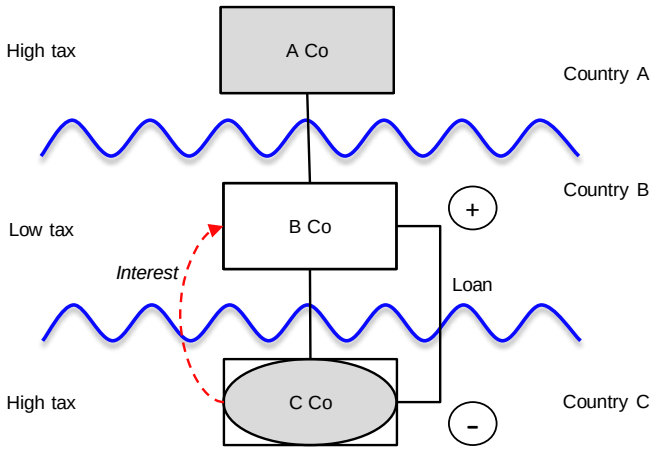


40. The interest payment is a deductible intra-group payment. The reason it is not included in the calculation of CFC income is due to a conflict in the treatment of the payer under the laws of the payer and the parent jurisdiction. Under both rules set out above, the payment would be included as an item of interest paid by another CFC when calculating A Co's CFC income. The difference between the narrow option and the broad option, however, is illustrated by a situation where C Co makes a payment to B Co that is not deductible in Country C. This payment would not be base-eroding, so it would not be included in A Co's CFC income under the narrow option but it would be included in A Co's CFC income under the broad option.

41. While the example illustrated above involves a conflict in entity classification, a similar result can be achieved using a loan that is treated as equity for Country A purposes (so that the interest payment is characterised under Country A's CFC rules as an exempt dividend). The effect can also be achieved by exploiting differences in the treatment of residence for tax purposes. For example, Country A, applying its own rules on tax residency, could treat B Co as tax resident in Country C so that the interest payment is ignored under a same country exception,[23] under which Country A's CFC rules do not include income in CFC income if it was received from taxpayers resident in the CFC jurisdiction. As these arrangements all rely on a conflict in the characterisation of the entity or instrument they would also be caught under both approaches outlined above.

[23] Several countries including the US have exceptions in their CFC rules for payments made between companies in the same country.

**Questions for consultation**

1. Would any particular practical issues arise from treating transparent entities as separate entities in the cases listed above? If so, what are they and how could they be dealt with?
2. Should the recommendations consider any other issues related to determining which entities could be considered to be CFCs?
3. Are there any practical problems with either the narrow or the broad version of the modified hybrid mismatch rule mentioned above?

## CHAPTER 3: THRESHOLD REQUIREMENTS

42. Threshold requirements can be used to limit the scope of CFC rules by excluding companies that are likely to pose little risk of base erosion and profit shifting and instead focusing attention on cases that are higher-risk because they exhibit some characteristic or behaviour that means there is a greater chance of profit shifting. Thresholds can therefore both help make CFC rules more targeted and effective and also reduce the overall level of administrative burden by ensuring that certain companies are not affected by the rules, although these companies may still need to satisfy certain reporting requirements to show that they fall below any threshold requirements.

### I. Recommendations

43. The recommendation is to include a low-tax threshold where the tax rate calculation is based on the effective tax rate. The low-tax threshold should also use a tax rate that is meaningfully lower than the tax rate in the country applying the CFC rules.

### II. Explanation

44. Three different types of threshold requirements were considered by the countries involved in this work:

(i) a set de minimis amount below which the CFC rules would not apply,

(ii) an anti-avoidance requirement which would focus CFC rules on situations where there was a tax avoidance motive or purpose, and

(iii) a low-tax threshold where CFC rules would only apply to CFCs resident in countries with a lower tax rate than the parent company.

#### *A. De minimis threshold*

45. A de minimis threshold could reduce administrative burdens and make CFC rules more targeted and effective by ensuring that certain companies are not subject to the rules.[24] Many countries' rules already include a de minimis threshold under which income that would otherwise be treated as CFC income is not included in the taxable income of the parent company if it falls under a certain ceiling. Generally, countries provide an entity-based exemption where the entity's attributable income is less than either a certain percentage of the CFC's income or a fixed amount of the CFC's income or where the taxable profits are less than a fixed amount. Some rules also include a separate cap for certain types of profits that present a higher risk of being diverted. The UK rules, for example, use two different thresholds. They either set a relatively low threshold regardless of the type of income or they set a much higher threshold that applies if non-trading profits (which are generally easier to divert) do not exceed the lower number. In other words, a much higher de minimis threshold applies to CFCs if they can show that they do not earn much income that is likely to be highly mobile.

[24] A de minimis threshold could also eliminate the need for a special rule for exempting working capital under a transactional approach. See infra Chapter 5.

46. One possible way that de minimis thresholds can be circumvented is through fragmentation, under which companies split their income amongst multiple subsidiaries, each of which falls below the threshold. Countries' current rules often include safeguards to protect against such circumvention. Although this may add some complexity to the rules, countries' experience has shown that these safeguards may not necessarily be inconsistent with the threshold's purpose of reducing administrative and compliance burdens. For example, the de minimis test under the United States rules includes a general anti-abuse rule which looks at the income of two or more controlled foreign corporations in aggregate and treats it as the income of a single corporation if a principal purpose for separately organising, acquiring, or maintaining such multiple corporations is to prevent income from being treated as attributable under the de minimis test. Although such an anti-abuse rule increases the potential administrative burden of the de minimis threshold, this increased burden is counteracted in the U.S. rule with a rebuttable presumption that automatically treats the income of multiple CFCs as that of a single corporation if the CFCs are related persons. Under the German rules, the general de minimis test is subject to the condition that the attributable income must not exceed the same amount at the level of the CFC and at the level of the shareholder. This means that even if the attributable income of one CFC does not exceed the threshold, the CFC may still be subject to CFC rules if the same threshold is exceeded by adding all of a taxpayer's shareholdings in several CFCs. Examples of these two different types of anti-fragmentation rules are set out below.

47. In Figure 2 below, A Group rearranges its operations to ensure that profits that previously arose in a single CFC are split between three CFCs in different territories. After the reorganisation, A Co. is the sole shareholder of three controlled foreign corporations. CFC1, CFC2 and CFC3 all have the same taxable year, and they are partners in FP, a foreign entity in Country C classified as a partnership. For their current taxable years, each of the CFCs derives part of its attributable income from FP and part from other activities undertaken separately.

**Figure 2. De minimis test**

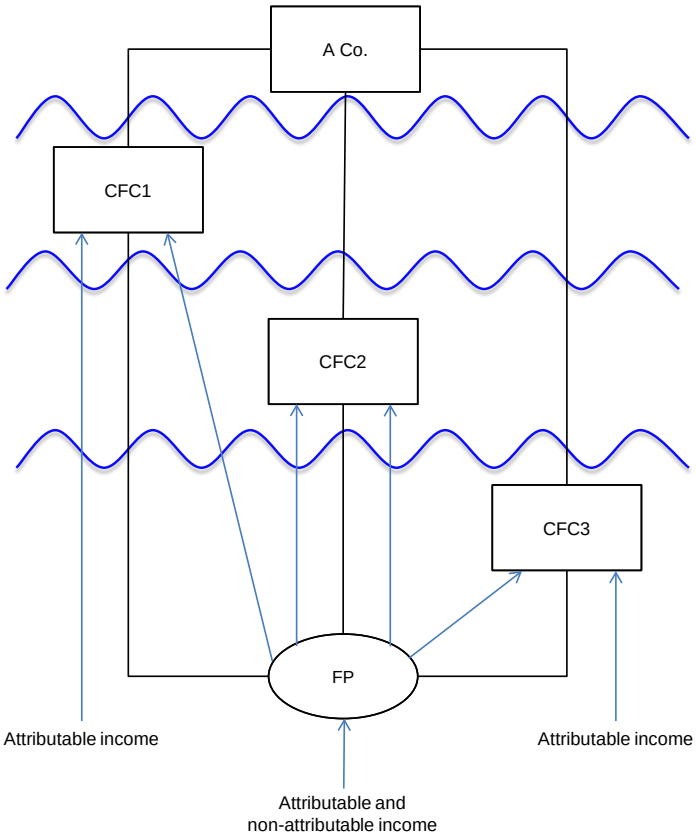

48. Under the de minimis test in Country A, attributable CFC income is not taken into account for the purposes of residence taxation if the sum of the attributable CFC income is less than the lesser of 5% of total income or 1,000,000. Based on the figures in the table below, the attributable income derived by each CFC for its current taxable year, including income derived from FP, is less than five percent of the gross income of each CFC or is less than 1,000,000.

| | CFC 1 | CFC 2 | CFC 3 |
|---|---|---|---|
| Gross income | 3,000,000 | 7,000,000 | 11,000,000 |
| 5% of gross income | 150,000 | 350,000 | 550,000 |
| Attributable income | 140,000 | 348,000 | 547,000 |

49. Therefore, without the application of an anti-abuse rule, each CFC would be treated as having no attributable income after the application of the de minimis test.

50. If, however, Country A were to have either an anti-abuse rule similar to the U.S. rule or an anti-fragmentation rule similar to the German rule, A Co. would be subject to CFC taxation on the income earned by its foreign subsidiaries. If Country A has an anti-abuse rule that treats the income of all three CFCs as the income of one CFC for the purposes of calculating the de minimis threshold if the CFCs are related persons (or if the principal purpose for separately organizing, acquiring, or maintaining such multiple corporations is to prevent income from being treated as attributable under the de minimis test), then the attributable income is aggregated. The sum of the attributable income of the CFCs is 1,035,000, so it exceeds the 1,000,000 de minimis threshold and will be taken into account under Country A's CFC rules. If, instead, Country A has a rule that the attributable income at the level of the shareholder must not exceed the attributable income at the level of the CFC, the de minimis threshold would also be overcome because the attributable income at the level of the shareholder is 1,035,000, while it is significantly less at the level of the CFCs.

51. Therefore, although there is no general recommendation under this building block for or against de minimis thresholds, if jurisdictions choose to implement such a threshold, best practice would be to combine this with an anti-fragmentation rule. Annex I sets out information on the de minimis rules that several jurisdictions have implemented.

### *B. Anti-avoidance requirement*

52. An anti-avoidance threshold requirement would only subject transactions and structures that were the result of tax avoidance to CFC rules. This could narrow the effectiveness of CFC rules as preventative measures, and it could also increase the administrative and compliance burdens of CFC rules if it were administrated as an up-front rule. Additionally, an anti-avoidance rule should not be necessary if the rules defining the income within the scope of a CFC regime are properly targeted. An anti-avoidance requirement has therefore not been considered further in this paper, but this is not intended to imply that an anti-avoidance requirement can never play a role in CFC rules that tackle base erosion and profit shifting.

### *C. Low-tax threshold*

53. Most CFC rules include a low-tax threshold for two reasons. First, this approach means that the rules only apply to companies that benefit from low foreign taxes and therefore pose the greatest risk of profit shifting. Second, a focus on low-tax CFCs can provide greater certainty for taxpayers and reduce the overall administrative burden. A low-tax threshold can, however, mean that CFC rules do not prevent all

base erosion and profit shifting since they still allow erosion of the parent jurisdiction's base to high- or medium-tax jurisdictions, so a few jurisdictions do not include such a threshold.

54. There are different ways for jurisdictions to determine when a CFC has paid a low rate of tax. Jurisdictions may require taxpayers to apply a comparative approach on a case-by-case basis, or they may use a black list or white list to simplify the process. Using a list generally eliminates the need for a case-by-case analysis of a jurisdiction's tax rate and is a way of communicating whether jurisdictions apply a lower level of tax. The use of black or white lists can make it easier for tax administrations to determine when CFC rules do and do not apply and for taxpayers to know whether they will be subject to CFC rules. The United Kingdom, for example, has a white list that excludes CFCs located in listed jurisdictions which are sufficiently similar in terms of tax base and tax rate to the United Kingdom, provided that several other conditions are also met.[25] Finland issues a list of tax treaty countries (not including EU Member States) to be considered low-tax based on nominal tax rates and tax incentives but only regards a company in those countries as a CFC if the company itself pays less than 3/5 of the taxes that would have been paid in Finland. This approach therefore sets a presumption that a CFC is lowly taxed, but that presumption must be supported with an actual comparison of taxes paid. Sweden applies a similar approach under which countries are broken into three categories: (i) countries where no entities would be CFCs, (ii) countries where entities without CFC income would not be CFCs while entities with CFC income would be compared against the low-tax threshold, and (iii) countries where all income will be compared against the low-tax threshold. Australia applies a white list approach under which companies resident in countries with an income tax system comparable to Australia's tax system are not subject to CFC taxation. CFCs in a listed jurisdiction are therefore exempt from Australia's CFC rules unless they are subject to a concessional tax regime.

55. Low-tax thresholds require that the rate at which the CFC was taxed be below a given benchmark. Low-tax thresholds apply one of two benchmarks. They either compare the tax rate in the CFC jurisdiction to a particular fixed rate that is considered low-tax or they compare the tax rate in the CFC jurisdiction to a portion or percentage of the parent country's own rate. Both approaches seem equally relevant within the context of designing rules to combat BEPS as both recognise that the incentive to shift profits will be greater where there is a significant differential between effective tax rates.

56. Under the first approach, countries would need to set a fixed tax rate below which their CFC rules would potentially apply. An example of such an approach would be the German CFC rules, which define any level of taxation below 25% as low taxation. The second approach instead calculates the low-tax threshold based on a percentage of the tax that would have been paid to the parent jurisdiction, which thereby includes both tax rate and tax base in the analysis. The UK and Finnish CFC rules provide examples of this approach. Under UK law, there is no low taxation if the "local tax amount" is at least 75% of the "corresponding UK tax". As mentioned above, under the Finnish rules, a low-tax regime is considered to exist if the company itself pays less than 3/5 of the taxes that would have been paid in Finland. Whichever approach is adopted, the benchmark should be meaningfully lower than the tax rate in the country applying the CFC rules. As shown in Annex II, most CFC rules apply benchmarks that are at the most 75% of the statutory corporate tax rate. It is therefore recommended that the benchmark be set at this level or lower.

[25] These conditions are that there cannot be more than insignificant amounts of certain defined types of income that are not effectively taxed in the CFC's territory of residence, that none of the CFC's income has been generated using IP that has been effectively transferred from a UK related party in the previous six years, and that the CFC is not involved in any arrangement intended to create a UK tax advantage for any person.

57. Once the benchmark has been set, CFC rules must determine the tax rate in the CFC jurisdiction in order to compare this to the benchmark. Current CFC rules do this in one of two ways. They either compare the benchmark to: (1) the nominal (or statutory) tax rate in the CFC jurisdiction or (2) the effective[26] tax rate of the CFC. Although using the statutory tax rate may reduce administrative complexity and compliance costs, the recommendation is to use the effective rate. This latter approach takes into account the tax base or other tax provisions that may increase or reduce the effective rate paid by the CFC and therefore is likely to create a much more accurate comparison than focusing on the statutory tax rate. Using the effective tax rate, however, means that whether the low-tax threshold has been met must be determined in two steps. First, there must be a calculation of the effective tax rate, which requires determining both how much tax the CFC paid and how much income the CFC earned. Second, the effective tax rate must be compared to the benchmark.

58. The determination of the effective tax rate is typically based on the ratio of the actual tax paid in the CFC jurisdiction to the total taxable income either computed according to the rules of the parent/shareholder's country or according to an international accounting standard such as IFRS. This method generally recognises that even in a situation where the statutory tax rate is not considered a low tax rate, low taxation may occur as a result of (1) reducing the tax base or (2) lowering the tax burden by subsequent rebates of taxes paid or through non-enforcement of taxes. This can be illustrated in the following two examples.

a) **Example 1:** A CFC in Country C generates 80,000 of income in one year. Country A applies its CFC rules if the effective tax rate applied to the CFC was below a fixed rate of 25% taking into account the tax base as computed under Country A's rules. Country C allows an exemption of 20% when computing the taxable income to promote investments.

| | |
|---|---|
| **Calculation of actual tax paid in Country C:** | |
| Income in Country C | 80,000 |
| Exemption (20%) | 16,000 |
| Taxable income | 64,000 |
| Corporate tax due (30%) | 19,200 |
| Actual tax paid | 19,200 |
| **Income in Country C:** | |
| Income in Country C[27] | 80,000 |
| **Effective tax rate calculation:** | |
| 19,200/80,000 | **24%** |

[26] The effective tax rate may be computed as an average of the effective tax rates over several years.

[27] For the reasons described below, the income is calculated according to Country A's rules. All other calculations in this table are calculated using Country C's rules since they were used to determine the tax actually paid to Country C.

b) **Example 2:** A CFC in Country C generates 80,000 of income in one year. Country A applies its CFC rules if the effective tax rate applied to the CFC was below a fixed rate of 25% taking into account the tax base as computed under Country A's rules. Country C does not provide for an exemption to promote investments. However, according to Country C's rules, shareholders of the CFC may claim a refund in the amount of 20% of the corporate income tax paid by the CFC upon distribution of dividends. The dividends would be tax exempt in Country A.

| **Calculation of actual tax paid in Country C:** | |
|---|---|
| Income | 80,000 |
| Taxable income | 80,000 |
| Corporate tax due (30%) | 24,000 |
| Refund upon distribution (20% of 24,000) | 4,800 |
| Actual tax paid | 19,200 |
| **Income in Country C:** | |
| Income in Country C[28] | 80,000 |
| **Effective tax rate calculation:** | |
| 19,200/80,000 | 24% |

59. In both Example 1 and Example 2, the low tax requirement is met in reality because the effective tax rate is below the fixed rate of 25%. The calculation of the effective tax rate should therefore ensure that situations such as those illustrated in Example 1 and Example 2 are found to meet the low tax requirement, and the discussion below provides ways to ensure this.

60. The calculation of the effective tax rate uses a fraction where the numerator is the actual tax paid and the denominator is the CFC's income. Although the determination of the actual tax paid could require proof that tax was in fact collected and not refunded, the definition of the numerator could be more straightforward if it instead focuses just on the final tax burden (including, for example, subsequent rebates of taxes paid and non-enforcement of taxes).

61. Compared to calculating the actual tax paid, the determination of what to include in the total taxable income (i.e., the denominator) may be more problematic. If the denominator were to refer to the foreign tax base, the effective tax rate would equal the statutory tax rate of the CFC jurisdiction,[29] which would undermine the purpose of the effective tax rate calculation. The denominator should therefore be either the tax base in the parent jurisdiction had the CFC income been earned there or the tax base

[28] The income is calculated according to Country A's rules. All other calculations in this table are calculated using Country C's rules since they were used to determine the tax actually paid to Country C.

[29] This is, of course, only true if there are no rebates and the tax was in fact collected and enforced.

computed according to an international accounting standard such as IFRS, with adjustments made to reflect the tax base reductions that result in low taxation of the CFC income.[30]

62. In theory, the effective tax rate calculation could find a *higher* effective tax rate than the statutory tax rate in the CFC jurisdiction if the base calculated under the rules of the parent jurisdiction is smaller than that calculated under the rules of the CFC jurisdiction. In reality, however, this situation is unlikely to occur much in practice as groups would not structure themselves into jurisdictions where the advantage of a low statutory tax rate is entirely or partially set off by a tax disadvantage in the tax base computation (e.g. non-deductible expenditures).

63. The effective tax rate computation could also be influenced by the "unit" used for the calculation. Country rules generally calculate the effective tax rate on a company-by-company basis, but it could in theory be computed either narrowly or broadly. A narrow approach could, for example, calculate the effective tax rate for each item of income earned by a company. Computing the effective tax rate on a narrower basis allows jurisdictions to apply the low-tax threshold just to the income that has been defined as attributable income under the rules. For example, if royalties were subject to taxation under a jurisdiction's definition of CFC income, the low-tax threshold would apply more precisely to that income provided that the effective tax rate was computed narrowly for each type of income. This may also more directly address situations where only certain types of income benefit from a low tax rate, while others are subject to regular taxation. Calculating the effective tax rate on a narrower basis would, however, increase both the administrative complexity and compliance burden associated with the low-tax threshold. A broad approach could calculate the effective tax rate on a company-by-company or country-by-country basis. A country-by-country approach would aggregate the income of all entities of a group in a single country to calculate the effective tax rate. These broader approaches would reduce the administrative complexity and compliance burden compared to the narrow approach, but calculating the low-tax threshold on a country-by-country basis would add complexity compared to doing so on a company-by-company basis because it would require aggregating the calculations for all the CFCs in each jurisdiction rather than just calculating

---

30 This tax base would require a determination of how to treat loss carry forwards of the CFC from previous years and any losses permitted in a consolidation or group relief regime. If CFC legislation uses the rules of the parent jurisdiction to calculate taxable income, they could also deal with losses in accordance with the rules of the parent jurisdiction (this could mean that a consolidation regime in the CFC jurisdiction would be ignored for purposes of CFC taxation by the parent jurisdiction). If, instead, they use a common standard, then there would need to be a common rule for how losses should be used to calculate taxable income.

Most countries generally apply their own rules to compute the tax base of the CFC. In principle, however, not all differences in computing the tax base of the CFC under the rules in the CFC and the parent jurisdiction raise the policy concerns that are typically associated with preferential tax provisions or practices that could shrink the tax base for certain income and therefore have the effect of significantly reducing the taxes paid by the CFC. In theory, therefore, CFC rules could take account of only those differences that raise such policy concerns when calculating the tax base of the CFC. For example, if the tax base in the parent jurisdiction is higher than that in the CFC jurisdiction only because of timing differences in accounting, this may not need to be reflected in the denominator. A participation exemption also may not fall within the scope of tax advantages that are considered in determining the denominator because it is typically granted to eliminate double taxation and not to reduce the actual tax burden. However, the denominator should take into account any differences that are a result of a tax advantage in the CFC jurisdiction that attracts offshore capital and therefore increases the risk of profit shifting. A notional interest deduction may be an example of such a tax advantage. While differentiating between tax base definitions that implicate the policy concerns underlying CFC rules and those that do not may make sense in theory, however, the only rules that would be likely to make this differentiation are those that start with the tax base calculated under the rules of the CFC jurisdiction and then adjust this upward to reflect the rules of the parent jurisdiction.

the effective tax rate for each CFC. If CFC jurisdictions exempt PEs from taxation, the effective tax rate of permanent establishments of a CFC should be calculated separately from that of the CFC to ensure that the tax rates of the PE and CFC cannot be blended to avoid the low-tax threshold.

**Questions for consultation**

4. What practical problems, if any, arise when applying a low-tax threshold based on an effective tax rate calculation?
5. How could these problems be addressed or mitigated?
6. Does the discussion above correctly address the situation of permanent establishments that are subject to a different tax rate than CFCs?

## CHAPTER 4: DEFINITION OF CONTROL

64. Control is the third building block and is a key element of CFC rules because it determines what entities CFC rules can be applied to. Existing regimes variously refer to a person's "control", "participation", or "influence" in a foreign entity. Generally speaking, requiring control reflects countries' view that resident shareholders should only be taxed on income earned by a foreign company if they appear to have had some input in how, when and where that income was earned. Control is important in the context of BEPS because it may be an indication that resident shareholders had sufficient influence over the foreign company and its tax policy to use it to shift profits. A control requirement can also be used to reduce the scope of CFC rules and limit the compliance costs for minority shareholders where they have no real ability to influence the foreign company.

### I. Recommendations

65. The definition of control requires two different determinations: (i) of the type of control that is required and (ii) of the level of that control. The recommendation for control is that CFC rules should at least apply both a legal and an economic control test so that satisfaction of either test results in control. Countries may also include de facto tests where they achieve the same effect. Secondly, a CFC should be treated as controlled where residents hold, at a minimum, more than 50% control, although countries that want to achieve broader policy goals or prevent circumvention of CFC rules may set their control threshold at a lower level. This level of control could be established through the aggregated interest of related parties or unrelated resident parties or from aggregating the interests of any taxpayers that are found to be acting in concert. Additionally, CFC rules should apply where there is either direct or indirect control.

### II. Explanation

66. In order to arrive at the above recommendation, the two different determinations were considered in greater detail.

#### *A. Type of control*

67. Control can be established in various ways, which are outlined below.

- *Legal control* generally looks at a resident's holding of share capital to determine the percentage of voting rights held in a subsidiary. Legal control is a relatively mechanical test that is easy for both tax administrations and taxpayers to apply and reflects the fact that a sufficient degree of voting rights should enable residents to elect the board of directors or an equivalent body responsible for the affairs of the foreign entity and thus ensure that a CFC acts in accordance with their instructions. However, corporate law often provides a large degree of flexibility in designing the share structure of a corporation, thus enabling the use of artificial share terms and structures to circumvent the control requirement. A focus on legal control is therefore likely to be too narrow, and most countries also use a concept of economic control. Although tests that consider the entitlement to acquire shares, and therefore voting rights, through certain contingent rights such as options may help mitigate some of the weaknesses of legal control.

- *Economic control* focuses on rights to the profits, capital and assets of a company in certain circumstances such as dissolution or liquidation. Such a test recognises that a resident can control an entity through an entitlement to the underlying value of the company even where they do not hold the majority of the shares. This entitlement may result from rights to the proceeds in the

event of a disposal of the entity's share capital or the entity's assets on a winding up. It may also include rights to a distribution of profits other than on a disposal or winding up. Economic control is also a relatively mechanical test that focuses on facts that can be objectively assessed. It does add some complexity but in reality those with a majority stake in a company are likely to be aware of that fact and may have other reporting obligations in respect of that controlled relationship. However, economic control rules may be circumvented, most obviously by means of group reorganisations involving the insertion of a new group holding company. In such situations, both legal and economic control may change even though there is little or no change in the underlying business or the level of decision-making and business control exercised by the previous parent.

- *De facto control* can look at similar factors to those considered by many countries when considering where a company is resident for tax purposes. For instance, countries can look at who takes the top-level decisions regarding the affairs of the foreign company or who has the ability to direct or influence its day-to-day activities. Another approach could focus on any particular contractual ties with the CFC that permit taxpayers to exert a dominant influence over it. However, a de facto control test would require a significant analysis of the facts and circumstances and some subjective assessment of these. This will lead to added costs, complexity and uncertainty for taxpayers. In addition, based on countries' experience in operating residence rules, the type of criteria mentioned above may also be relatively easy to avoid and therefore difficult for a tax administration to prove. If a de facto control test could be designed to arrive at accurate results without these significant administrative and compliance burdens, it could also be included in a recommendation, but it would have to capture at least as many situations as captured by tests that look at legal or economic control.

- *Control based on consolidation* can look at whether a non-resident company is consolidated in the accounts of a resident company based on accounting principles (e.g. International Financial Reporting Standards, or IFRS). This is not fundamentally different from the approaches mentioned above. In fact, like the legal and de facto control tests, accounting principles also refer to criteria such as voting rights or other rights to exercise a dominant influence over another entity, but they use these criteria to establish whether or not an entity should be consolidated. For example, under IFRS 10 a taxpayer should consolidate any entity if, for instance, it has rights that give the power to direct the activities that most significantly affect the subsidiary's returns. The power may be based on voting rights in relevant areas of the subsidiary's business activity or generally on a controlling influence over the subsidiary which effectively tests legal and de facto control.

68. The above approaches are often combined to prevent circumvention and to ensure that rules operate effectively. Based on the above analysis it was agreed that a control test should focus on a combined approach that includes at least legal and economic control. Both of these tests are reasonably mechanical and so should limit the administrative and compliance burden involved. However, countries could also consider supplementing these tests with either a de facto test or a test based on consolidation for accounting purposes. Both of these, but particularly a broad de facto test, could increase complexity and compliance costs. Therefore countries that are attracted to using one of the latter two tests to address specific problems (such as those raised by inversions) may find that these problems could be better addressed with separate targeted provisions rather than through an extension of the concept of control for CFC purposes.

### *B. Level of control*

69. Once a CFC regime has established what actually confers control, the next question is how much control is enough for the CFC rules to apply. If the aim is to catch all situations where the controlling party has the ability to shift profits to a foreign company, then, as a minimum, CFC rules would need to capture situations where resident taxpayers have a legal or economic interest in the foreign entity of more than 50%. Some existing rules find control when the parent owns exactly 50%, but the majority of rules require more than 50% control. Because owning 50% or less could still allow parent companies to exert influence in certain situations, jurisdictions are free to lower their control threshold below 50%.[31]

70. The determination of whether this 50% threshold has been met is straightforward when control is held by a single resident shareholder. Shareholders can exert influence in other situations, however, and existing rules generally attempt to capture these instances as well with their control rules. The general principle underlying control tests is that minority shareholders that are acting together to exert influence should have their interests aggregated when determining whether the control test has been met. Whether or not minority shareholders are acting together can be determined in at least three ways, and it is recommended that jurisdictions adopt one of these approaches to ensure that minority shareholders who are in fact exerting influence are taken into account when determining whether there is control.

71. The first way of determining whether minority shareholders are acting together is to apply an "acting-in-concert" test, which applies a fact-based analysis to determine whether the shareholders are in fact acting together to influence the CFC. If they are, their interests will be aggregated to determine whether the CFC is subject to CFC rules. This approach is not very common because it creates significant administrative and compliance burdens, but one of its advantages is that it may more accurately identify when shareholders are in fact acting together than a more mechanical test. An example of how an acting-in-concert test would work is illustrated below.

[31] Some CFC rules recognise that control can be exercised below 50% ownership. For instance, New Zealand's CFC rules find that the control threshold has been met when a New Zealand resident owns 40% or more of the foreign subsidiary. Note that a much lower control threshold may raise EU legal concerns for Member State CFC rules, even if they do not apply to CFCs in other Member States. This is because, as the control threshold is reduced, CFC rules may implicate not just the freedom of establishment but the free movement of capital, which applies to Member State rules that are discriminatory toward residents of third countries as well as residents of other Member States. This concern would only arise when the threshold is reduced below the level of "significant influence".

**Figure 3. Control interest held by unrelated parties acting in concert**

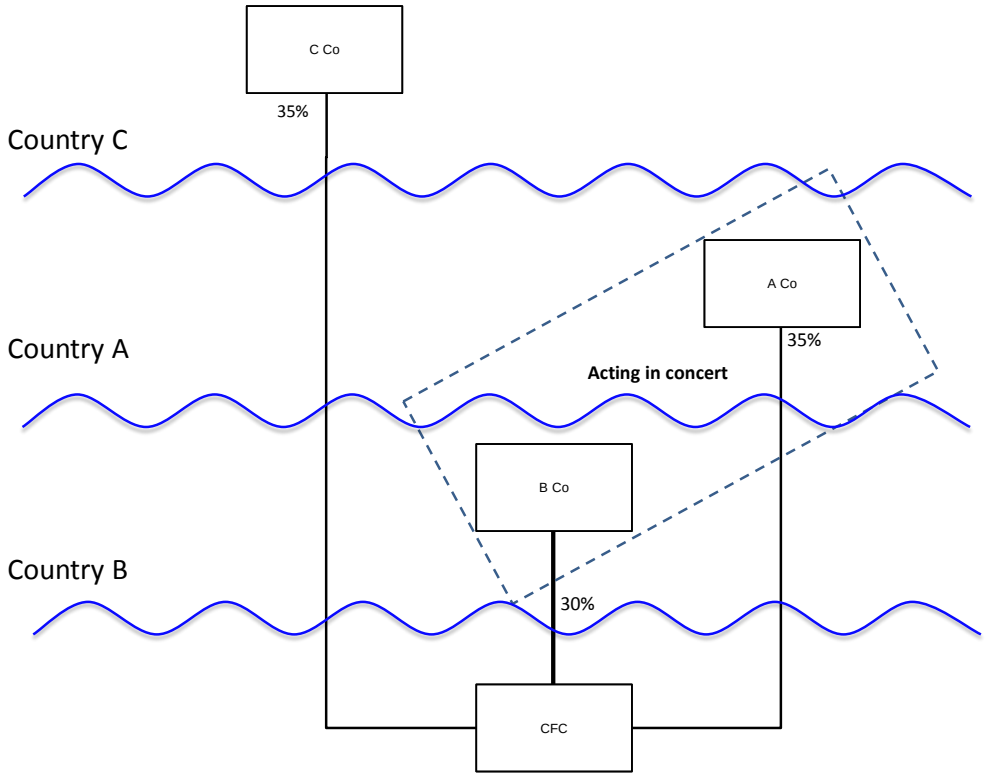


72. C Co, A Co and B Co are all unrelated parties. Country A's CFC rules require a controlling interest of more than 50% before they can be applied. There is no other resident taxpayer in Country A so unless Country A has an acting-in-concert rule that aggregates the interest of both residents and non-residents, and the acting in concert rule can be shown to apply, then there will be no attribution of the income of CFC to A Co. As mentioned above, an acting-in-concert rule would add complexity and compliance costs, especially where it is applied to both residents and non-residents. However, it could also prevent circumvention of CFC rules.[32]

73. The second way that some rules determine whether minority shareholders are acting together is to look to the relationship of the parties. If rules only include the interests of *related* parties when determining whether the 50% threshold has been met, this would eliminate the need for a fact-based acting-in-concert test, but it will apply more narrowly since it focuses more directly on the profit shifting opportunities created by structures involving related parties. However, since BEPS structures often involve wholly owned subsidiaries or at least subsidiaries owned by related parties, a focus on related parties may still capture most structures that raise BEPS concerns.[33] An example of how a related party test would work is illustrated below.

---

32 A similar scenario to that above could arise where there is a joint venture. Some countries have specific rules to deal with joint ventures. Under the UK CFC rules, a UK resident 40% joint venture partner would be treated as having control if there is a non-UK resident that holds at least 40% and no more than 55% of the legal and economic interest in the joint venture. This rule has a similar effect to an acting-in-concert type rule.

33 This may not capture all structures that raise BEPS concerns, however, and other action items have recognised that unrelated parties may act together to achieve a certain outcome. The work on hybrid mismatch arrangements, for example, includes structured arrangements involving unrelated parties.

**Figure 4. Control interest held by related parties**

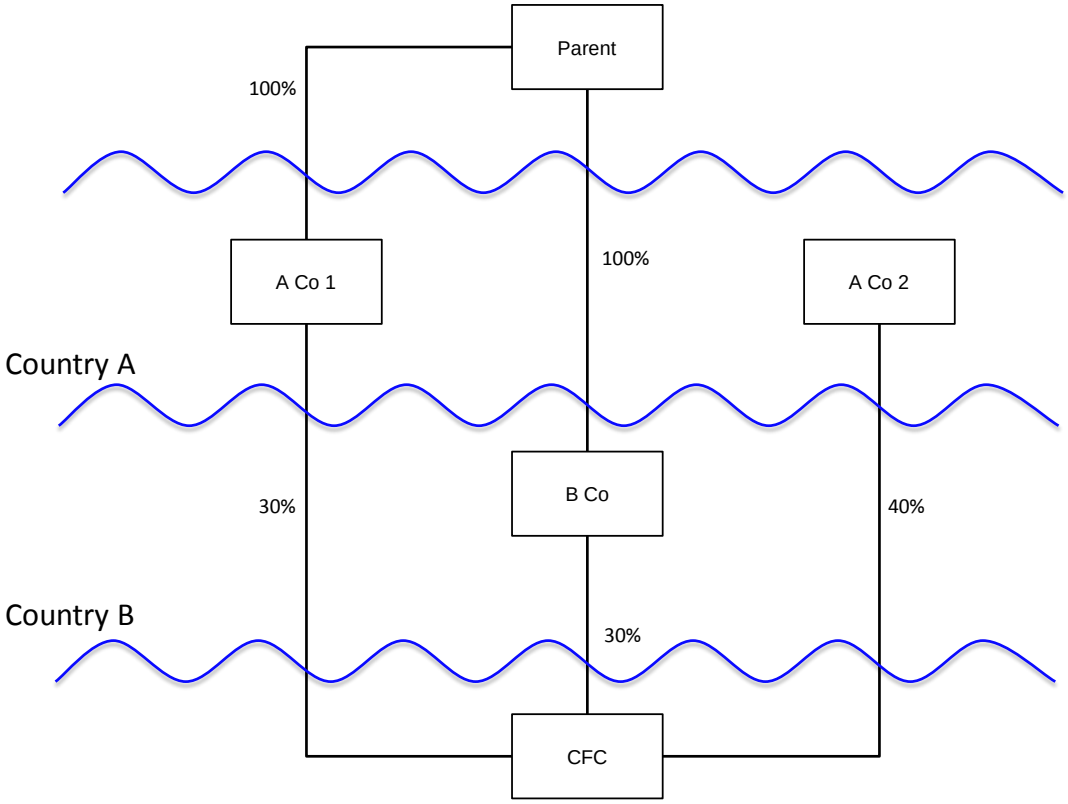


74. A Co1 and A Co2 are unrelated residents in Country A. For Country A's CFC rules to apply, related parties or residents that act in concert must hold an aggregate interest in the CFC of more than 50%. Parent Co splits the interest in CFC between A Co1 and B Co, in order to circumvent the control requirement in country A. If, however, Country A applied a related party rule that aggregates the interests of related parties to determine control, then A Co1 would be found to be a controlling shareholder because of the shared ownership between A Co 1 and B Co, which are both owned by Parent. This would mean that 30% of the income of CFC would be attributed to A Co 1. No income would be attributed to A Co 2. The same outcome is likely to arise under an acting-in-concert test. Whether or not income is attributed to B Co would depend on the rules in operation in Country B but if they operated the same form of related party rule, then 30% of the income of CFC would also be attributed to B Co.

75. The third way that CFC rules determine whether minority shareholders are exerting influence over the CFC is to impose a concentrated ownership requirement. In the United States, for example, the interests of all residents in the CFC are aggregated so long as each interest is higher than a set percentage (e.g., 10%). This approach leads to the interests of a concentrated group of residents being considered, and it also eliminates the need for separate rules for attribution, since the 10% threshold for control can also be used to determine which residents will have income allocated to them. Alternatively, a concentrated ownership requirement could require just that ownership be divided between a small number of resident shareholders (e.g., 5 or fewer), regardless of their ownership percentage, but this may raise administrative and compliance concerns, and focusing just on the number of owners may also not always accurately identify whether taxpayers are in reality acting together.

76. A concentrated ownership rule can be illustrated with reference to Figure 4 above. If Country A expanded its control requirement and applied its rules where there were a small group of resident

shareholders, in this situation A Co 1 and A Co 2, then the CFC rules would apply and 30% of the income of CFC would be attributed to A Co 1 and 40% to A Co 2. This would prevent circumvention of the rules but would attribute income to A Co 2. This might not be a concern in the context of a 40% holding but a test that focuses on a small group of residents would potentially attribute profits to A Co 2 even if it was not acting in concert with A Co 1 and had no real ability to transfer income or profits to the CFC.

77. Including the interests of non-resident taxpayers in any of these three approaches could add to the complexity of the control provisions but such an addition could be considered if countries were concerned about either related or unrelated parties acting together to try and circumvent the CFC control provisions.[34] The recommendations above therefore do not recommend that non-residents are also taken into account in determining the level of control, but, as with all recommendations, the recommendation included in this document only establishes a minimum, and jurisdictions with different policy aims could include non-resident interests when determining whether the 50% threshold (or any lower threshold) was met. If jurisdictions chose this option, limiting taxation of resident taxpayers to their actual share of CFC income (rather than the aggregated amount) should eliminate any concerns about double taxation.

78. Regardless of which of the three approaches is taken, control should be defined to include both direct and indirect control since profit-shifting opportunities also arise where a subsidiary is held indirectly through an intermediate holding company. If CFC rules do not apply to indirect holdings then they can be very easily sidestepped. The example below illustrates one of the questions raised by indirect control, which is whether a level of indirect control that falls below the control threshold should still lead to a finding of control if the control threshold is met at each level in the chain of ownership.

**Figure 5. Calculation of indirect control interest**

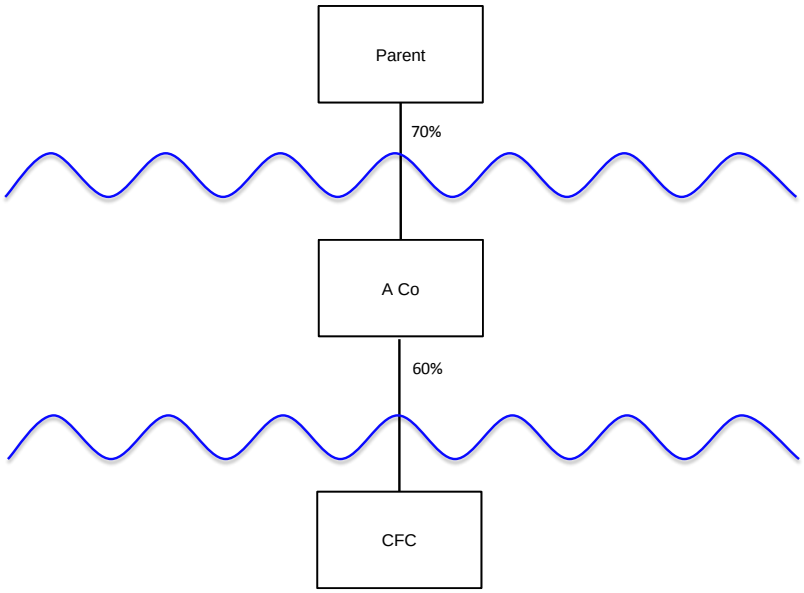


79. In this example, Parent has a 70% interest in A Co, which holds a 60% interest in CFC. There is therefore more than 50% control at each tier, but Parent itself only has an interest of 42% (70% x 60%) of CFC. Despite this limited economic control, A Co. has enough economic control to influence CFC and Parent has enough economic control to influence A Co., so it is recommended that CFC rules should find

[34] Non-resident taxpayers whose interests could possibly be included could include family members of resident shareholders or board members of domestic parent companies.

Parent to have sufficient influence over CFC to meet the control threshold since the control threshold is met at each level in the chain of ownership.[35] The amount attributed to Parent should, however, be limited to its actual economic interest of 42%.

80. Although including both direct and indirect control in the control analysis could arguably increase the potential for double taxation if all countries were to introduce CFC rules, this situation could be addressed with rules to reduce or eliminate double taxation.[36]

81. Determining whether a company in the parent jurisdiction has control also requires a rule determining when control should be established as well as what types of entities can be considered to have control. On the first question, many rules determine control based on how much of an economic or legal interest was held at the end of the year, but jurisdictions concerned about circumvention of this rule can also include anti-abuse provisions or a test that looks at whether the parent company had the necessary level of control at any point during the year. On the second question, in order to ensure that all situations where resident shareholders have the opportunity to shift income into a foreign subsidiary are captured, CFC rules should consider the interests held by all resident taxpayers, rather than limiting this inquiry to corporate entities or other limited groups.

**Questions for consultation**

7. What practical problems, if any, arise when applying a control test?
8. Are there particular practical problems that arise when applying a control test that considers interests held by unrelated or non-resident parties? If so, what are they, and how can they be dealt with?

[35] For example, once control is established at a level, some CFC rules deem the control at that level to be 100% for the purpose of determining the level of indirect control at the next level.

[36] See infra Chapter 8.

## CHAPTER 5: DEFINITION OF CFC INCOME

**Note for consultation**

This chapter does not yet include recommendations for the building block on the definition of CFC income. Instead, this chapter discusses several possible options for provisions that jurisdictions could implement in order to accurately attribute income that raises BEPS concerns. The 2015 report on Action Item 3 will include recommendations on the definition of CFC income, and the OECD welcomes comments and suggestions during the public consultation about the design of such recommendations.

In line with the general comments setting out the non-consensus status of the discussion draft as a whole, it should be emphasised that the approaches to defining CFC income do not reflect a consensus view. In particular, there are different views on the excess profits approach set out at Part III B. The differences arise because some countries believe that an excess profits approach will include income irrespective of whether it arises from genuine economic activity of the CFC and where there is appropriate substance. Other countries believe that excluding a normal return on eligible equity is an effective method for identifying CFC income.

The approach taken by this chapter is first to outline general features that would likely be included in effective CFC rules, including a form-based analysis and several different versions of a substance analysis. This chapter then discusses how CFC rules should attribute the categories of income that raise the most challenges for existing rules. These categories of income include dividends, interest and other financing income, insurance income, sales and services income, and royalties and other IP income. This chapter then discusses two possible approaches that could accurately attribute these categories of income, whether implemented separately or in combination with each other. Finally, this chapter concludes by discussing whether CFC rules should take a transactional or entity approach to attributing income. Based on the discussions in this chapter, the public is invited to provide comments about the form of recommendations for the building block on the definition of CFC income.

82. This chapter discusses the fourth CFC building block on the definition of CFC income. Once a foreign company has been determined to be a CFC, the next question is whether the income earned by the CFC is of the type that raises BEPS concerns and should be attributed to shareholders or controlling parties. CFC rules therefore need to define attributable income, which is also referred to here as "CFC income". Existing CFC regimes apply one of two approaches. They apply either a full-inclusion system, which treats all income earned by a CFC as CFC income regardless of its character, or a partial-inclusion system, which only attributes certain types of income earned by a CFC. As all income is included under full-inclusion systems, there is no need to separately define CFC income, but such an approach will catch categories of income that do not raise specific profit shifting concerns. Partial-inclusion systems, however, need to accurately define CFC income.

83. Many countries have chosen to implement CFC rules because they are more mechanical than transfer pricing rules. More mechanical rules, however, are generally broader by nature and cannot be as easily targeted to BEPS concerns. Therefore, existing CFC rules that are more mechanical may attribute more income than is required in order to combat BEPS. This is the case for all CFC rules that apply full-inclusion systems and for many partial-inclusion systems that define CFC income broadly. Although jurisdictions can implement a full-inclusion approach or a broad partial-inclusion approach if they are focused on broader policy aims than combating profit shifting,[37] this chapter focuses on more narrowly targeted partial-inclusion systems that only attribute income that raises profit shifting concerns. Member

[37] The ability of jurisdictions to implement a full-inclusion system is, of course, subject to jurisdictions' other international obligations.

States of the European Union in particular may need to combine more mechanical CFC rules with a substance test to ensure that CFC rules do not attribute income earned from genuine economic activities.[38]

84. This chapter does not set out general recommendations for how to define CFC income, but it instead discusses several possible approaches that jurisdictions could adopt. Whichever approach is adopted, CFC rules should accurately attribute income that raises base erosion and profit shifting concerns. In particular, CFC rules should be able to accurately define attributable income in the context of income earned by CFCs that are holding companies, income earned by CFCs that provide financial and banking services, income earned by CFCs that engage in sales invoicing, income from IP assets, income from digital goods and services, and income from captive insurance and re-insurance. In practical terms, this means that CFC rules must be capable of dealing with at least the following types of income:

- Dividends
- Interest and other financing income
- Insurance income
- Sales and services income
- Royalties and other IP income

85. Accurately attributing this income does not mean that CFC rules should include all of this income in CFC income. It instead means that, at a minimum, CFC rules should attribute income that raises BEPS issues within each category and should not attribute income that arises from value-creating activity in the CFC jurisdiction. If CFC rules are designed to apply only to stripping of the base of the parent jurisdiction, then income should not be attributed if it arises from value-creating activity in any jurisdiction other than the parent jurisdiction.

## I. General approaches to defining CFC income

86. The general principle underlying most existing partial-inclusion rules is that highly mobile and/ or "passive" income should be attributed to shareholders because it is likely to have been diverted away from the parent jurisdiction or a third jurisdiction and into the CFC jurisdiction. CFC rules generally achieve this principle by defining CFC income to include, at a minimum, interest, royalties, and dividends, and by excluding "active" income that was earned in the course of an active trade or business from the definition of CFC income.

87. The fundamental challenge that CFC rules face is how to define CFC income so that highly mobile income that does in fact represent profit shifting is attributed but income that arises from actual activities undertaken by the CFC is not. One approach that some jurisdictions take is a ***form-based analysis*** that categorises income as CFC income based on its formal classification. This analysis would, for example, include dividends, interest, and royalties in CFC income and exclude sales, services, and other income that is by its nature more associated with the carrying on of a trade or business. These traditional and formal categories may be based on the principle that, if the income earned by a CFC arises from a trade or business in the CFC jurisdiction, treating that income as attributable may undermine the competitiveness of the CFC. By only attributing income that does not arise from actual activities, therefore, CFC regimes are able to strike a balance between creating a disincentive for shifting income to a non-resident subsidiary and maintaining the competitiveness of subsidiaries engaged in actual activities in their own jurisdictions.

[38] Jurisdictions that are applying CFC rules narrowly to focus on profit shifting may also combine more mechanical CFC rules with a substance test.

88. A pure form-based analysis does not, however, accurately attribute income earned in the modern business environment. Although this mechanical approach has the benefits of reduced administrative and compliance costs, it can be easily manipulated and does not attribute all income that arises from base erosion and profit shifting. Attributing only interest, dividends, and royalties means that income that was, for example, earned from the use of an IP asset but was legally treated as sales income would escape CFC taxation, an issue that is exacerbated in the digital economy. Attributing all interest, dividends, and royalties also means that income that falls into these categories but in fact arose out of an active business (for example, income earned from a business engaged in active financing) will be attributed even if it does not raise any concerns about base erosion or profit shifting.

89. Because of these weaknesses with a pure form-based analysis, existing CFC rules typically apply some sort of ***substance analysis*** that looks to whether the income arose from substantial activities undertaken by the CFC itself. This rule may apply in place of or alongside a form-based analysis, but most existing substance analyses apply alongside other more mechanical rules and are not stand-alone rules. Although such rules add to the complexity of CFC rules, they appear to be necessary to accurately identify and quantify shifted income. They may also be particularly necessary in CFC rules that apply between Member States of the European Union, since a substance analysis could prevent CFC rules from attributing income that arises from genuine economic activities. A substance analysis could take at least three forms:

- One option would be a substantial contribution analysis. This would be a threshold test that applies a facts and circumstances analysis to determine whether the employees of the CFC have made a substantial contribution to the income earned by the CFC. Once the CFC has shown a given level of activities, *all* income earned by that CFC would then not be treated as attributable.[39]

- A second option could be a viable independent entity analysis. Rather than trying to determine what constitutes a substantial contribution, this option would look at all the significant functions performed by entities within the group to determine whether the CFC is the entity which would be most likely to own particular assets, or undertake particular risks, if the entities were

[39] An example of this is in the U.S. CFC rules. Under the substantial contribution test that applies to manufacturing income earned by a CFC, manufacturing income that would normally be treated as attributable will not be attributable if "the facts and circumstances evince that the controlled foreign corporation makes a substantial contribution through the activities of its employees to the manufacture, production, or construction of the personal property sold". 26 CFR 1.954(3)(a)(4)(iv)(a). The test then provides a list of seven activities that could indicate that the CFC did make a substantial contribution, all of which essentially consider whether the CFC was engaged in actual value creation. These activities include (1) oversight and direction of the activities or process pursuant to which the property is manufactured, produced, or constructed; (2) activities that are considered in determining whether the products were substantially transformed or if the assembly or conversion of component parts into a final product are substantial in nature and generally considered to constitute the manufacture, production, or construction of property; (3) material selection, vendor selection, or control of the raw materials, work-in-process or finished goods; (4) management of manufacturing costs or capacities (for example, managing the risk of loss, cost reduction or efficiency initiatives associated with the manufacturing process, demand planning, production scheduling, or hedging raw material costs); (5) control of manufacturing related logistics; (6) quality control (for example, sample testing or establishment of quality control standards); and (7) developing, or directing the use or development of, product design and design specifications, as well as trade secrets, technology, or other intellectual property for the purpose of manufacturing, producing, or constructing the personal property. 26 CFR 1.954(3)(a)(4)(iv)(b). The Regulations then provide examples to illustrate how this facts and circumstances test would apply.

unrelated.[40] If the CFC would not own an asset or risk, the profits arising from it should be included in CFC income.[41] For CFCs that received IP income, this could, for example, involve consideration of all the group's activities to manage and control the development, enhancement, maintenance, protection, and exploitation of intangibles. Under this analysis, there are no set thresholds for the activities that must be performed by a CFC or must not be performed by affiliates. Whether or not profits are included in CFC income depends on the balance of activities between entities and how unrelated parties would have been most likely to allocate assets and risks.

  - The viable independent entity analysis could be applied in all circumstances, including those which involve IP-related profits. In the context of a group that continues to own, develop, and exploit IP, the location of capabilities and functions which enable the group to manage risks associated with that IP can be used to identify which group entity would own the IP under normal commercial conditions, which would determine where the substance was located. An assessment of whether, and to what extent, a CFC has the relevant capabilities would consider all the key functions that the group usually performs and where they are performed. The capability to approve decisions would therefore not be sufficient.

  - The viable independent entity analysis could be combined with a carve-out under which income that was earned with the substantial contribution of a related party would automatically be included in CFC income. This alternative would include all income earned from related party outsourcing, and it would arrive at an outcome that was similar to that achieved under the third option.[42]

- A third option would be an employees and establishment analysis. This would use employees and establishment as a more mechanical way of determining whether the activities required to earn the CFC income are located in the CFC jurisdiction.[43] Existing CFC tests generally look at,

---

40 A similar approach has been adopted by the United Kingdom, which has used the concepts and guidance developed by the OECD for Article 7 to identify the group's significant people functions associated with each asset, so that it can be determined whether the CFC undertakes those functions.

41 This proposal has the potential to address foreign-to-foreign stripping. If CFC rules are targeted only at income shifted from the parent jurisdiction, the viable independent entity approach could be designed in such a way that profits would only be included if the asset or risk would be owned by an entity resident in the parent jurisdiction.

42 A similar approach has been adopted by Germany, where CFC rules first apply an analysis similar to the viable independent entity analysis and then include income that would otherwise have been excluded if a related party made a substantial contribution to that income.

43 Examples include the now-repealed UK exempt activities test and the South African foreign business establishment test. The UK test exempted all the profits of the CFC if it met the following three requirements: (i) it had a business establishment in a territory of residence, (ii) it was effectively managed in its territory of residence, and (iii) it did not have as its main business any of a group of listed activities, including investment business and dealing in goods for delivery to or from the United Kingdom (although it could be a holding company if it met specific requirements). The test defined a business establishment to include "premises which are, or are intended to be, occupied and used with a reasonable degree of permanence, and from which the company's business in its territory of residence is wholly or mainly carried on." The test defined effective management to mean that "the number of persons employed by the company in the territory in which it is resident is adequate to deal with the volume of the company's business, and any services provided by the company for persons resident outside that territory are not in fact performed in the United Kingdom." Under the South African foreign business establishment test, income of a CFC is not attributable if it is produced by a foreign business establishment (FBE) that

among other things, whether the CFC had the necessary business premises and establishment in the CFC jurisdiction to actually earn the income and whether the CFC had the necessary number of employees with the requisite skills in the CFC jurisdiction to undertake the majority of the CFC's core functions. This approach therefore builds on existing ideas but looks just at employees and establishment and this approach may remove some of the complexity of more fact-intensive tests, such as the viable independent entity analysis. There are two main differences between this option and the viable independent entity analysis:

- First, the employees and establishment analysis will subject income to CFC taxation if the CFC outsources its core business functions and some of the value-creating activities are actually undertaken elsewhere. Therefore the CFC itself must have the employees and establishment necessary for earning the actual income, rather than just the employees and establishment necessary for managing or overseeing the value-creating activities. Even as a proportionate test this analysis may apply to more CFCs because it will apply where core functions are outsourced whereas the viable independent entity analysis may allow a greater amount of outsourcing if it focuses more on managing and overseeing, rather than actively undertaking.

- Second, the employees and establishment analysis does not require an analysis of risks or asset ownership. Instead, it just asks whether the CFC had the employees and establishment necessary to earn the income. If a CFC earned IP income, for example, the CFC would have to show that it had the skilled employees required to undertake the R&D and other value creating activities and that it had the research facilities and other business premises required to develop the IP. It would not, however, need to identify the IP assets, establish ownership of the assets, or show that it managed or controlled the risks. An employees and establishment analysis could therefore act as a factual but more mechanical approach as compared to a more complex functional analysis.

90. Both the second and third options could be applied as either threshold tests or proportionate tests. If they were threshold (or "all-or-nothing") tests, a set amount of functions or employees and establishment would allow all income of the CFC to be excluded. Therefore, if the viable independent entity test were applied as a threshold test, a CFC that had engaged in sufficient management or control to qualify as a viable independent entity would have all of its income excluded from CFC taxation. A CFC that had not engaged in these activities would have all of its income included in CFC income. If the employees and establishment test were applied as a threshold test, a CFC that had the required employees and establishment would have all of its income excluded, but a CFC that did not have all of these required employees and establishment would have all of its income included. If they were applied as proportionate tests, this would allow some income to be excluded from CFC taxation if the CFC carried out some of the required substantial activities. In order to apply a proportionate test, the CFC rules would have to determine the substance and activities which would have to in fact be performed to earn the CFC's income and compare this to the substance and activity of the CFC. This would increase the administrative complexity and compliance costs of the rules,[44] but it could also ensure that only income that arose from BEPS would be attributed. Although many CFC rules with substance analyses apply these analyses as

---

operates at arm's length. FBEs are places of business with a physical structure that are used (or will continue to be used) for at least one year. These places of business must be where the business of the CFC is undertaken and they must be suitably equipped and staffed with managerial and operational employees who render services for the purpose of conducting the CFC's primary operations.

44 It may be possible to design a proportionate substance analysis that considers more mechanical factors, such as expenditures. More mechanical proportionate approaches, however, are looking at proxies for substantial activities, so they may not always be accurate in their attribution.

threshold tests, some CFC rules do apply substance analyses as proportionate tests. The proportionate application of a substance analysis should prevent businesses from locating just the right type and amount of activity in a CFC to ensure that its profits are excluded by the CFC rules of its parent jurisdiction. One further advantage of applying a substance test on a proportionate basis is that it is more likely to comply with EU law because it would allow CFC rules to attribute only the income that does not arise from genuine economic activities

91. The differences between all of these versions of a substance analysis can be illustrated in the following example. Sub B is a CFC in Country B that is wholly owned by Parent, which is resident in Country A. Sub B made a buy-in payment, and Sub B and Parent have entered into a cost-sharing agreement for producing software in Region B under which Sub B undertakes all the regional production, translation, packaging, distribution, and marketing activities for the software and then receives all sales income from the sale of the software in Region B. Parent undertakes all research and development of the software.

- Under the substantial contribution analysis, as the employees of Sub B made a substantial contribution to the income earned by Sub B, *none* of the CFC's income would be included.

- The viable independent entity analysis could be applied as either a threshold test or a proportionate test. If it were applied as a threshold test, the inclusion of Sub B's income would depend on whether Parent or Sub B would be more likely to own all the IP rights to region B. There would in effect be a comparison with unrelated parties and, if in that context the party responsible for R&D would own the assets and subcontract the marketing, Sub B's income would be included. If, instead, the party responsible for marketing was likely to own the software assets and subcontract any residual or ongoing R&D activity necessary to maintain and enhance the product, then Sub B's income would be excluded. If the viable independent entity analysis were applied as a proportionate test, any profits arising from the activities performed by Sub B would be excluded, as would some of the profits due to ownership of the IP if and to the extent that Sub B would have an ownership in those IP assets if it were an unrelated party.

- The employees and establishment analysis could also be applied as either a threshold test or a proportionate test. If it were applied as a threshold test, all of the income of Sub B would be *included* in CFC income because Sub B did not have all the required employees and establishment to develop the software (even if it did have the required employees and establishment to exploit the software). If the employees and establishment analysis were applied as a proportionate test, a portion of the CFC's income that was proportionate to the employees and establishment that the CFC did not have would be included. This portion could be calculated, for example, by determining what type of establishment and what employees and skills would be required to both develop and produce the software and comparing the actual establishment and employees to this base. One possible way of applying the employees and establishment analysis on a proportionate basis would be to use expenditures as a proxy in certain contexts.

92. The advantages and disadvantages of these approaches are set out below:

- The advantages of the substantial contribution analysis are that, since it was developed in the context of manufacturing income, it may accurately attribute many types of income. One disadvantage is that it may not accurately attribute IP income. Another disadvantage is that the threshold may be low enough to allow "swamping", which occurs when a CFC uses the fact that it undertook a minimum level of substantial activities to shield income from CFC taxation and therefore not attribute any of the income.

- Many of the advantages and disadvantages of the viable independent entity analysis are based on its similarity to a transfer pricing analysis or the analysis required under the Authorised OECD Approach.[45] An advantage of this similarity is that this may reduce overall administrative complexity and compliance costs because taxpayers will already be performing related analysis and providing the information for transfer pricing purposes. A further advantage is that this approach eliminates one of the complexities of transfer pricing as there is no need to decide where to allocate income that was not actually earned by the CFC. Instead, CFC rules automatically attribute this income to the parent, thereby simplifying the overall analysis. Although the similarity to transfer pricing means that the viable independent entity analysis may appear duplicative, it builds on the work to correctly price actual contractual arrangements and determines whether the intragroup asset and risk allocation resulting from those contracts is what would be expected on a commercial basis. The main disadvantage is that it requires a fact-intensive analysis involving an element of judgment, which would increase administrative complexity and compliance costs and may lead to uncertainty. These issues could, however, be minimised by the use of suitably targeted entity-level exemptions.

- The main advantage of the employees and establishment analysis is that it requires a less fact-intensive analysis and is potentially more mechanical than the viable independent entity analysis. This approach also requires more activity than the substantial contribution analysis. It should therefore reduce administrative complexity and compliance burdens relative to the viable independent entity analysis, and it should reduce swamping relative to the substantial contribution analysis. If the employees and establishment analysis is applied as a threshold test, however, this second advantage would only be true if the threshold were set at a sufficiently high level to prevent swamping. If, however, it were applied as a threshold test and the threshold were set at even a moderately high level, there is a risk of including income even when the CFC engaged in substance. A proportionate approach would therefore reduce the risks of under-inclusion and over-inclusion, but one disadvantage of a proportionate employees and establishment analysis is that this would require a comparison of the employees and establishment in the CFC to the employees and establishment that would be required to earn the overall income, which may be a difficult comparison to undertake.

93. Along with applying form-based analyses and substance tests, existing CFC rules also try to determine whether income is highly mobile by looking at *from whom* it was earned (i.e., from related parties or from others) and *where* it was earned. On the first point, many existing CFC rules include income if it was earned from a related party on the grounds that income is more likely to be shifted in that situation. Some jurisdictions apply a very broad related party test that includes both income from sales to a related party and income from a sale of a good originally purchased from a related party. Another version of a related party rule would apply to income from goods that were developed in conjunction with a related party (e.g., intellectual property that was developed with a related party or as part of a cost-sharing agreement with a related party).[46]

94. On the second point, existing CFC rules consider where the income was earned, as well as from whom it was earned. This approach can take the form of either an anti-base-stripping rule or a source-country rule, and the underlying principle is that income that was earned from sales and services provided in the CFC jurisdiction is less likely to raise concerns about profit shifting, while income that was earned

[45] The Authorised OECD Approach (AOA) to attributing profits to permanent establishments as set out in the report issued on 22/06/2010.

[46] Such a rule was proposed by the U.S. administration as part of its definition of foreign base company digital income in 2015.

from another jurisdiction is more likely to raise such concerns. Anti-base-stripping rules would include CFC income if it was earned for sales to a related or unrelated party located in the parent jurisdiction or for services or investments located in the parent jurisdiction. This raises an important policy question which is whether CFC rules should only attribute income that has been stripped from the base of the parent jurisdiction or whether they should also attribute income that has been stripped from the base of third countries. If CFC rules take the first approach, then only income generated in the parent jurisdiction will be categorised as CFC income. This does raise the question of how to determine whether income was or could have been earned in the parent jurisdiction, and this narrower approach may therefore create opportunities for manipulation. A broader approach would be to include income stripped from the base of any jurisdiction and to categorise any such income as CFC income. A broader anti-base-stripping rule could therefore treat any income generated in a jurisdiction other than the CFC jurisdiction as CFC income. This would be harder to manipulate but may attribute income that has genuinely been earned from activities carried out by the CFC. Such a situation could arise, for example, where a foreign company that previously had customers in the parent jurisdiction became a CFC when it was purchased as part of a merger or acquisition. This shows that either a narrow or a broad approach could be over-inclusive, but this is more likely to occur in the context of broad approaches that attribute more income. An anti-base-stripping rule could also take the form of a source-country rule, which excludes highly mobile income from CFC income if it was earned in the CFC jurisdiction. One question to consider in this context is how to determine when such income has been earned in the CFC jurisdiction.

95. Existing CFC rules generally use a combination of a form-based analysis and a substance-based analysis, often combined with rules that focus on related parties and the jurisdiction where the income was earned. As highlighted by Action Item 3, however, these rules still struggle to accurately attribute income earned by many types of CFCs. The section below therefore discusses possible ways to more accurately attribute income that gives rise to particular difficulties for existing CFC rules.

**Questions for consultation**

9. What are the practical problems with any of the three substance analyses set out above? How could these practical problems be dealt with?
10. Do you have experience with applying substance analyses in existing CFC rules? If so, how can these be made more mechanical while still accurately attributing income?

## II. How CFC rules can accurately attribute income that raises BEPS concerns

96. CFC rules should accurately attribute:

- Dividends
- Interest and other financing income
- Insurance income
- Sales and services income
- Royalties and other IP income

97. Jurisdictions can, of course, apply CFC rules to a wider category of income than those listed above, but the categories listed above raise BEPS concerns and can pose challenges for existing CFC rules. Other types of income such as rents and leasing fees, for example, are not discussed in detail here, but jurisdictions could include these types of income within CFC income when the property is located outside

of the CFC jurisdiction or when the rents are earned from related parties. CFC rules could also attribute certain types of capital gains where they raise BEPS concerns.[47]

*i. Dividends*

98. Under a form-based analysis, it would appear appropriate to treat dividends as passive income, but many existing CFC rules treat dividends as active income in one of two situations. First, if the dividends were paid out of active income (because the company paying dividends to the CFC was engaged in an active trade or business), many current CFC rules treat those dividends as active income to the extent those are non-portfolio dividends or dividends paid by a related party. Many countries now exempt certain dividend income, and they continue to exempt dividends earned by the CFC if those dividends would have been exempted from taxation in the parent jurisdiction had they been earned by the parent company. Second, if the CFC is in the active trade or business of dealing in securities then dividends paid to that CFC are treated as active income if they are linked to the CFC's trade or business.

99. Dividend income therefore could most accurately be attributed by categorising it first as passive but then excluding it from CFC income if it were paid out of active income (or by related parties out of active income) or if the CFC were in the active trade or business of dealing in securities. This could in effect require some degree of a substance analysis to ensure that the company paying dividends to the CFC is engaged in an active trade or business. Countries operating a dividend exemption could implement this rule by applying the exemption only to dividends that would be exempt from taxation in the parent jurisdiction if they had been earned by the parent company.

*ii. Interest and other financing income*

100. The general concern underlying the treatment of interest and financing income is that this income is easy to shift and therefore could have been shifted by the parent into the CFC, leading to overleveraging of the parent and overcapitalisation of the CFC. This situation, which raises significant BEPS concerns, can be identified either by looking at objective factors such as whether the income was earned from a related party or whether the CFC was overcapitalised[48] or by determining whether the CFC had the substance required to earn the interest and financing income itself. The majority of existing CFC rules treat interest and other financing income as passive when earned by the CFC, but some take a different approach and only treat interest as CFC income in specific circumstances such as when it has been earned from related parties, when the CFC is overcapitalised, or when the activities contributing to the interest were located outside the CFC jurisdiction. Even CFC rules that generally characterise interest and other financing income as passive have exceptions for interest that was earned from an active financing business.

101. Interest and other financing income could therefore be attributed by categorising this income first as passive but excluding it from CFC income if the CFC was in the active trade or business of financing and it was not overcapitalised.[49] This would require applying one of the substance analyses to determine

---

47 It is unlikely that capital gains arising from fixed property assets located in a CFC jurisdiction would raise BEPS concerns, but capital gains arising from mobile non-fixed assets may be a more appropriate inclusion in CFC income.

48 As an example of what would be considered overcapitalisation, the UK CFC rules include a safe harbour for banking income under which a CFC is *not* considered to be overcapitalised if the tier one capital ratio (i.e., tier one capital over the total risk weighted assets) of the CFC does not exceed 125% of its UK banking group's capital ratio.

49 This could also be combined with a look-through rule that treated interest paid out of active earnings as active, although this could raise foreign-to-foreign base stripping issues.

whether the CFC was in fact engaged in the activities required to earn the financing income. It would also require some method of determining whether the CFC was overcapitalised.

*iii. Insurance income*

102. The general concern underlying the treatment of income from the insurance of risks is that profits can be shifted away from jurisdictions in which those risks are located and into a low-tax jurisdiction. For example, an insurance company that is licensed to carry on an insurance business in a particular jurisdiction may underwrite insurance policies in respect of persons or businesses located in that jurisdiction and then reinsure some or all of these risks to a CFC that is resident in a low-tax jurisdiction (and that is generally not licensed to carry on an insurance business in the particular jurisdiction), thereby shifting profits associated with the insurance of those risks. In addition groups that are not generally involved in insurance activities may establish "captive" insurance companies (often in a low-tax jurisdiction), and by various means insure risks associated with the groups normal business activities with the captive insurance company, thereby shifting profits to the captive insurance company. Generally speaking, little activity is required in the management of these reinsurance operations or these "captive" insurance operations. Further, due to the complexity of the insurance of risks generally, taxing authorities may not have the capacity or ability to successfully challenge the extent to which companies have actually transferred the risks to related CFCs. As such, CFC attribution rules may play a key role in preventing BEPS in this context.

103. As shown in Annex III, existing CFC rules typically take one of two approaches. Some treat insurance income as passive income, but they generally provide an exception when the CFC was engaged in the active trade or business of providing insurance. Because the question of whether an insurance company is engaged in an active trade or business may be difficult to answer, other CFC rules attribute insurance income in one or more of the following three cases: (i) the CFC was overcapitalised relative to comparable companies in the business of providing insurance, (ii) the policy holder, annuitant, beneficiary, or location of the risks insured were outside the jurisdiction, or (iii) the insurance income was derived from contracts or policies with a related party. In the third situation, some CFC rules are narrower and only attribute insurance income derived from related parties if the related party also received a deduction for the payment of the insurance premium.

104. Effective CFC rules could therefore focus on one or more of the following factors: (i) whether the income was derived (directly or indirectly) from a related party (and, for a narrower rule, whether the related party was able to deduct insurance premiums paid to the CFC), (ii) whether the parties to the insurance contract or the risks insured were located outside the CFC jurisdiction, (iii) whether the CFC had sufficient substance to assume and manage the risks on its own accord, and (iv) whether the CFC was overcapitalised.

*iv. Sales and services income*

105. Existing CFC rules generally treat sales and services income as active, but this treatment creates problems, which are exacerbated in the digital economy, in at least two contexts: (i) invoicing companies and (ii) IP income. In the context of invoicing companies, which earn sales and services income for goods and services that they have purchased from related parties and to which they have added little or no value, treating sales and services income as active allows groups to shift their income into CFCs engaged in invoicing activities and escape taxation even though the CFCs have not themselves added any value. In the context of IP income, income from IP that was shifted into the CFC and to which the CFC has added little to no value is often re-characterised as sales and services income and again escapes CFC inclusion. In order to prevent these outcomes, rules often only treat sales and services income as active if it was *not* earned from a related party and if the CFC had the substance required to produce the goods or provide the

services. With regards to the first requirement, CFC rules can define related parties in at least three ways. Sales or services income earned from a related party can include only income actually paid by a related party, it could include that income *and* income from the sale of a good originally purchased from a related party, or it could be even broader and include all of that income *and* also include income from goods that were developed in conjunction with a related party.

106. CFC rules could therefore treat sales and services income as active unless the income was earned from a related party or the CFC lacked the substance to earn the income itself. However, this rule would still require CFC rules to distinguish between sales and services income and IP income, and, as suggested below, that distinction is one of the most difficult issues facing CFC rules. CFC rules may therefore be more effective if they eliminate the distinction between sales and services income and IP income and treat all sales and services income as passive unless the CFC had engaged in the substantial activities (including the development of the IP) required to earn the income. Although this would be a very broad approach, it would address one of the main challenges facing existing CFC rules, which is how to differentiate between IP income and sales and services income, and it would mean that taxpayers could no longer avoid CFC taxation by treating IP income as sales and services income.

*v. Royalties and IP income*

107. As mentioned above, one of the most difficult types of income to attribute accurately is income earned from IP. This includes income earned from digital goods and services. Although the digital economy cannot generally be defined separately from other parts of the economy, one trait is that the value of digital goods and services is typically due to intellectual property.[50] In the context of both general IP income and digital goods and services, there is not always an identifiable IP asset, but income earned in both contexts is typically due to IP of some sort. Income from digital goods and services is therefore not a separate category of income but rather a subset of IP income.

108. IP income produces at least four particular challenges for CFC rules:

- IP income is particularly easy to disguise because it can be exploited and distributed in many different forms, all of which may have different formalistic classifications under the CFC rules of different countries. For instance, income from IP could be embedded in income from sales and therefore treated as active sales income under the CFC rules of different countries.
- IP assets underlying IP income are highly mobile, which makes it easier for the income to be diverted from the location where the value of the IP asset was created.
- IP assets are also hard to value because there are generally no exact comparables, and the cost base of these assets is often an inaccurate measure of the income they can generate.
- Income that is directly earned from the underlying IP asset is often difficult to separate from the income that is earned from associated services or products.

109. These challenges mean that neither a form-based analysis nor a substance analysis may be able to accurately attribute IP income because a form-based analysis can be circumvented by manipulating formal classifications and a substance-based approach may lead to under-inclusion if it excludes all of a CFC's income once the CFC has engaged in a fixed amount of activities, even if the CFC could not itself have generated all the income since it did not contribute to the value of the underlying IP. As highlighted above one of the fundamental concerns with IP income is that, because IP itself is highly mobile, the value of the

[50] The discussion of CFC rules and the digital economy builds on the work done by the Task Force on the Digital Economy.

IP can be developed in one jurisdiction (often the parent jurisdiction) and then shifted out of that jurisdiction to a related party in order to earn income in a low-tax jurisdiction. The development activities that created the actual value of the IP are therefore not carried out by the CFC, but the CFC receives the income generated by the IP. A further concern is that IP income can be easily disguised so that payments for the use of IP can be presented as sales or services income in order to avoid CFC rules. This combination of highly mobile assets and the difficulty of identifying all IP income means that current CFC rules face significant challenges in accurately identifying and attributing this income.

110. Some existing CFC rules treat royalties as passive, but given the challenges above this will not by itself accurately attribute all IP income. Other CFC rules focus on whether the CFC had the required activities to develop the IP, and some proposed rules have suggested that there should be a special rule for IP that looks at whether the IP was developed with a related party and whether the CFC made a substantial contribution to the IP. To effectively attribute IP income, CFC rules could consider both whether the income was earned from a related party (including whether it was earned for IP developed with a related party) and whether the CFC carried out the required activities to develop the IP underlying the asset. This would still require distinguishing between IP income and other income, however, and this distinction creates many of the challenges above. CFC rules may therefore be more effective if they apply just one rule to sales and services income and IP income that would treat all sales, services, royalty, and other IP income as passive unless the CFC had engaged in the substantial activities required to earn the income.

**Questions for consultation**

11. How can CFC rules accurately attribute income that raises concerns about BEPS (i) in a business that is licensed under an appropriate regulatory body and is market-facing in a particular jurisdiction, (ii) in a reinsurance business carried on by a CFC of a multinational insurance group or (iii) in a "captive" insurance business of a CFC that is not part of an insurance group? Are there practical problems with current rules that distinguish between (ii) and (iii)? If so, what are they and how can they be dealt with?
12. Are there practical problems with applying the same rule to sales and services income and IP income?
13. Are there existing CFC rules that accurately attribute any or all of these categories of income while also reducing administrative and compliance burdens?
14. Does the discussion above consider all categories of income that should be attributed under CFC rules?

## III. Possible approaches

111. The above section described in general terms how the five main types of income could be attributed under CFC rules. This section sets out two different approaches that jurisdictions could use to accurately attribute income earned by a CFC. These approaches could be combined so that, for example, the IP income test in the first approach could be replaced by the second approach if jurisdictions prefer the latter.

### *A. Categorical approach*

112. Some existing CFC rules have separate rules for different types of income, and this approach builds on these rules and has one rule for dividends, another rule for interest, and separate rules for other types of income. If jurisdictions adopt this approach, they could have rules similar to those discussed above. The rules would therefore set out the following treatment:

- Dividend income – Dividend income earned by a CFC will generally be treated as passive (and therefore included) unless the dividend was received from a company that was engaged in an active trade or business that produced active income (or, if the company received partly active income and partly passive income, then only the proportion of the dividend that represents the proportion of active income to the company's overall income will be excluded) or the CFC itself

was engaged in the active trade or business of dealing in securities. If dividend income is generally exempt from taxation, this exemption will continue to apply to any dividends that would have been exempt if they had been earned by the parent company.

- Interest and other financing income - Interest and other financing income earned by a CFC will generally be treated as passive (and therefore included) unless the CFC had the required substance to earn the income itself and the CFC was not overcapitalised.
- Insurance income – Income from insurance will generally be treated as active (and therefore excluded) unless (1) the income was derived from contracts or policies with a related party or (2) the parties to the insurance contract or the risks insured were located outside the CFC jurisdiction. However, income from insurance that falls under these two exceptions will only be treated as passive (and therefore included) if the CFC was overcapitalised or did not have sufficient substance to assume and manage the risks on its own accord.[51]
- Sales, services, royalties, and IP income – Income from sales, services, royalties, and IP will generally be treated as passive (and therefore included) unless the CFC had the required substance to earn the income itself.

113. The advantages and disadvantages of the categorical approach are set out below:

- *Advantages*:
  - The categorical approach allows jurisdictions to tailor their rules so that each type of income is treated accurately. This may make it easier for jurisdictions that already have CFC rules to modify their rules to incorporate certain reforms that apply only to certain types of income.
  - Because it is targeted and does not require a distinction to be made between sales and services and IP income, the categorical approach should accurately attribute income in the ways discussed in Section II.
- *Disadvantages*:
  - The categorical approach requires taxpayers and jurisdictions to categorise income in order to determine whether it is attributable. By combining sales and services income and IP income, however, this approach significantly reduces this disadvantage, but it does bring a greater range of activities within the ambit of CFC rules.
  - As the categorical approach depends in many cases on a substance analysis for accurate attribution, it requires jurisdictions to design and implement an effective substance analysis. As discussed in Section I, substance analyses vary in their effectiveness and the administrative and compliance burdens that they create, so this disadvantage depends on each jurisdiction's choice of substance analysis.

114. This categorical approach is not dissimilar to a traditional CFC rule that combines a form-based analysis with a substance analysis, and jurisdictions could achieve similar outcomes to the categorical approach by applying it as a two-step approach. In this version of the categorical approach, the first step

[51] However, as mentioned earlier, jurisdictions, particularly those that are not Member States of the EU, can implement CFC rules that apply more broadly and attribute insurance income even when the CFC did not engage in the insurance activity itself.

would require jurisdictions to divide income into formal categories. These could be the categories listed below, and jurisdictions could include more categories, such as rents or other income.

| Passive (included in the first step) |
|---|
| Dividends from passive income |
| Sales and services income |
| Royalties and other income from IP or digital goods and services |
| Interest income |
| Insurance income (i) that was earned from a related party or (ii) where the parties to the insurance contract or the risks insured were located outside the CFC jurisdiction |

| Active (excluded in the first step) |
|---|
| Dividends from active income |
| Insurance income other than that listed in the passive category |

115. The second step would then apply a substance analysis to the categories applied in the first step. This second step may not be necessary in all cases if jurisdictions identify certain types of income that are clearly passive and that do not need a substance-based prove-out.[52] The result of applying the two steps would be as follows:

- *Passive income* will be **included** in CFC income **unless** the CFC can meet the requirements of a substance analysis. This could be one of the three substance analyses described in Section I.

- *Active income* will be **excluded** from CFC income **unless** the CFC cannot meet the requirements of a substance analysis. This could be one of the three substance analyses described in Section I. These exceptions would not apply to dividend income.[53]

116. This two-step version of the categorical approach would arrive at the same results as those reached under the first version of the categorical approach described above, but it makes it clear that jurisdictions could add categories to the first step to attribute income that falls outside those considered in this discussion draft.

### *B. Excess profits approach*

117. Another approach to defining income could be an excess profits approach. This could involve a simpler and more mechanical approach than the categorical approach referred to above, and could also be

[52] Note that Member States of the European Union may not be able to eliminate the second step.

[53] The substance analysis in the second step could be combined with other tests discussed earlier such as related party tests or source jurisdiction tests.

used to deal with embedded IP. If such an approach were targeted at specific income, such as IP then jurisdictions could choose to implement an excess profits approach alongside other, more traditional CFC rules.

118. An excess profits approach is intended to target situations that give rise to BEPS by characterising as CFC income excess profits in low tax jurisdictions. Such an approach could be relevant in the context of IP income as, in some cases, taxpayers cannot expect to earn a profit in excess of the normal returns from simply purchasing and selling and providing services or manufacturing, unless those activities involve the use of IP. In certain situations, intangibles and risk-shifting transactions among related parties could be susceptible to systematic mispricing, leading to a profit in excess of the normal returns that would not occur if the same transactions were undertaken with unrelated parties. This should mean that, even without any restrictions, an excess profits approach will tend to apply to income from intangibles and risk shifting.

119. To improve the targeting and ensure that the excess profits approach was limited to such income, jurisdictions could include a specific entry criterion so that the excess profits approach would only apply in situations in which the CFC made use of intangible property acquired from or developed by or with the assistance of a related party. Alternatively, this approach could be combined with a prove-out under which the excess profits approach would apply to all CFCs *unless* they could show that they did not make use of any intangible property acquired from or developed by or with the assistance of a related party. If either of these provisions were included, intangible property would be defined broadly to mean something which is not a physical asset or a financial asset, which is capable of being owned or controlled for use in commercial activities, and which increases the value received by the company, over and above normal returns. Under this definition, intangible property should include intangibles that are not legally protected, such as trade secrets, know-how, customer lists, management systems, networks, data, goodwill, and other similar items.

120. With or without an entry criterion or prove-out, an excess profits approach could address a number of the challenges outlined in Section I. In particular, it would not rely on formal classification to determine whether income was included; it would not be necessary to consider where or from whom income was earned;[54] and it should not lead to swamping. This approach could, however, raise other concerns. These include whether the approach could target BEPS income with sufficient accuracy and the quantification of the normal return. The advantages and disadvantages of this approach are discussed below.

121. There are different views on the excess profits approach. The differences arise because some countries believe that an excess profits approach will include income irrespective of whether it arises from genuine economic activity of the CFC and where there is appropriate substance. Other countries believe that excluding a normal return on eligible equity is an effective method for identifying CFC income. The focus of this discussion has been on the role of a substance-based exclusion.

122. An excess profits approach must calculate the "normal return" and then subtract this normal return from the income earned by the CFC. The difference is the excess return, all of which is treated as CFC income. An excess profits approach could follow the steps below. Note that transfer pricing rules would apply prior to the application of the excess profits approach, so this would only apply to income that remained after transfer pricing rules had been applied.

[54] This approach could, however, be combined with a source country rule, which would allow income that was earned from the market of the CFC jurisdiction (e.g., from customers in the CFC jurisdiction or for services provided in the CFC jurisdiction) to be excluded from the excess profits calculation.

- Determination of normal return – In this context, the normal return means the return that a normal investor would expect to make with respect to an equity investment. This normal return could be calculated using the following formula:

  – normal return = (rate of return) x (eligible equity)

  – This formula requires a determination, first, of what rate of return to use and, second, of how to calculate eligible equity.

    Rate of return

    – In terms of *rate of return*, normal investors are unlikely to accept a risk-free rate of return with respect to an investment with an uncertain income stream. The normal rate of return with respect to an equity investment therefore should be a *risk-inclusive rate of return* that equals *the risk-free rate of return plus a premium reflecting the risk associated with an equity investment.*[55]

    – The risk-free rate of return varies by country, and it can generally be calculated by reference to an average of the government bond rate over several years. Although it may at first appear sensible to use the risk-free rate of return in the CFC jurisdiction, the principle underlying CFC rules is that the parent company has the influence to determine where the CFC is located (and whether income is shifted to it). The parent company is therefore likely to make its investment decisions based on the rate of return in the parent jurisdiction. The risk-free rate of return used to calculate the risk-inclusive rate of return could therefore be based on that in the parent jurisdiction.

    – The equity premium represents the additional expected return an investor requires in order to be compensated for the uncertainty of the return from a particular investment. Economic analysis has not conclusively determined what an appropriate equity premium would be, but it varies across industries and depends on the leverage of the company, and it is often calculated as being between 3% and 7%.

    – Economic studies often estimate the risk-inclusive rate as being approximately 8% to 10%, although this varies by industry, leverage, and jurisdiction. Given the analysis above, the excess profits approach could therefore consider the following four options for the risk-inclusive rate of return:

      1. A set percentage such as 10%. This would be simpler than any of the following approaches, but it may be less accurate.

      2. The 10-year government bond yield in the parent jurisdiction increased by a fixed equity premium such as 5% or 7%. This would be more complicated than the first option, but it may be more accurate on a country-by-country basis. It may, however, still not be accurate for individual groups.

      3. The multinational group's cost of capital, calculated according to the capital asset pricing method (CAPM) or another accepted calculation. This would be

[55] There are arguments that a risk-free rate of return may be more appropriate in certain tax systems (e.g., in the context of a symmetric income tax in a domestic tax system or worldwide system of taxation).

more accurate for individual groups than either of the above two options, but it could be more complex for tax administrators and unlisted companies than using a fixed percentage.

4. An alternative approach, under which the first or second approach would be the default, but groups could opt to use their individual cost of capital. This may increase the accuracy for some groups and reduce the compliance burden for those groups that use the simpler option. Using individual cost of capital may not however, be a viable alternative for non-quoted groups as they may not generally undertake this calculation. If this combination approach were adopted, jurisdictions could require groups to opt into the third option for a set number of years.

Eligible equity

- Eligible equity raises two questions: what equity should be included, and how should that equity be calculated? In response to the first question, as the excess profits approach is intended to provide an exemption for normal returns from assets used in connection with the actual functions carried out in a low-tax jurisdiction, then only equity invested in assets used in the active conduct of a trade or business, including IP assets, should be treated as eligible equity. As income subject to taxation under other CFC rules in the parent jurisdiction would not be included in total returns, jurisdictions could exclude from eligible equity any equity invested in assets that produced income that had been subject to taxation under other CFC rules in the parent jurisdiction.

- In terms of how to calculate the equity invested in the assets above, one option would be to use the book value of eligible assets less the liabilities apportioned to the eligible equity. Book value may sometimes be a more accurate measure than historic costs, but in other cases, assets are expensed as they are created and therefore not recognised on the balance sheet at all. Another option would be to use tax basis or tax acquisition cost for the valuation, as determined under the law of the parent jurisdiction. Liabilities would need to be apportioned, most likely based on relative asset values or earnings, potentially with the ability to trace liabilities associated with non-recourse debt.

- Calculation of excess profits – In this step, the normal returns calculated in the previous step would be subtracted from all income earned by the CFC that was not subject to taxation under other CFC rules in the parent jurisdiction. The excess would then be included in CFC income.

- Substance-based exclusion – As mentioned above, countries have different views on the role of a substance-based exclusion. Some countries believe a mechanical excess profits approach can be easier to administer and effectively targets the income that gives rise to BEPS concerns. These countries believe that it is not necessary to combine the excess profits approach with any other exclusion[56], although jurisdictions could choose to adopt some form of exclusion, if desired.[57] However, other countries consider that some design features of the excess profits approach could

[56] Some countries also believe that form-based analyses do not need to be combined with an exclusion.

[57] Other types of exclusions could include a prove-out that would allow a CFC to show that it did not make use of IP acquired from or developed by or with the assistance of a related party.

attribute profits that were not shifted. These countries believe that it is necessary to address the over-inclusion associated with the mechanical application of this approach. One way to achieve this would be to combine the excess profits approach with a substance-based exclusion. Moreover, most Member States of the European Union would consider that a form of substance-based exclusion would be needed to ensure that the excess profits approach complies with EU law.

123. For an example of how the excess profits approach would work, imagine that Sub B, located in Country B, is a wholly owned subsidiary of Parent, which is located in Country A. Sub B uses its manufacturing facilities in Country B to manufacture and distribute Product B, which uses IP purchased from Parent. In Year 1, Sub B spent 600,000 to purchase the rights to IP developed by Parent, and Sub B also invested a total of 500,000 in its manufacturing facilities. For book purposes, the acquisition of the IP and the investment in manufacturing facilities result in assets on the balance sheet with a value equal to the acquisition costs. Both the IP and the manufacturing facilities are used in Sub B's active trade or business of manufacturing and distributing Product B. In Year 2, Sub B earned 700,000 in profits from sales of Product B.[58] To determine whether Sub B has attributable income, the excess profits approach would calculate normal returns using the following formula:

– normal return = (rate of return) x (eligible equity)

124. If the rate of return for the excess profits approach had been set at 10%, then that formula would show that the normal return was 110,000 per year. (This is because 110,000 = 10% x (600,000 + 500,000.) The excess returns would then be calculated by subtracting 110,000 from Sub B's profits. Sub B's excess returns for Year 2 would therefore be 590,000, and all of this income would be treated as attributable income.

125. The above discussion sets out one method for calculating normal returns, but jurisdictions could adopt different methods to calculate normal returns and identify excess profits which would be subject to CFC taxation. In addition, some countries may also want to tax normal returns which arose from BEPS if they were not taxed elsewhere. The advantages and disadvantages of the excess profits approach are set out below:

- *Advantages*:

  – The excess profits approach (when not combined with a substance-based exclusion) involves a simpler and more mechanical approach than that required by a substance analysis.

  – The excess profits approach responds to the observation of some economists that most revenue loss from profit shifting results from shifting out of high-tax countries the supernormal returns that accrue to IP and risk.

  – Where swamping is a concern under an activity-based exception, the excess profits approach is a mechanical approach (when not combined with a substance-based exclusion) that would prevent swamping because taxpayers cannot rely on such exceptions to shelter IP-related income simply by locating a minimal level of activities in a jurisdiction.

  – The excess profits approach may respond to the concern of many jurisdictions that existing CFC rules may not attribute the supernormal returns earned from IP.

[58] For ease of calculation, this example assumes that there are no liabilities apportioned to the manufacturing facilities.

- The excess profits approach also addresses concerns about manipulation of formal classifications because it is not a form-based analysis. Where CFC rules rely on defining and identifying sufficient levels of activity, or determinations of substance, such features have created significant difficulties for some tax administrators. In contrast, an excess profits approach would use mechanical criteria to identify the low-taxed excess profits that would be subject to tax.

- Assuming the normal return is a proxy for the expected return from active operations absent the presence of intangibles, the excess profits approach is targeted at supernormal returns, including returns from the mispricing of intangibles or the inappropriate separation of functions from risk. To the extent the approach captures the mispricing of intangibles or the inappropriate separation of function from risk, the approach is consistent with the purpose of CFC rules.

- The excess profits approach also appears to deal with the problem of IP cash boxes in low-tax jurisdictions, which is fundamental to the BEPS Action Plan.

- *Disadvantages*:

  - Without a substance-based exclusion, some countries believe that the excess profits approach will not focus only on shifted income and will not meet the BEPS aim of ensuring that profits are taxed where the economic activities giving rise to them took place. As with other approaches, the excess profits approach uses a proxy to identify shifted income, and it may therefore be both over-inclusive and under-inclusive. This is because the normal return, as defined, may not approximate the return that the CFC's assets and activities would necessarily generate in the absence of BEPS.

  - Some countries believe that absence of a substance-based exemption would lead to a shift away from the traditional approach of excluding active income or income from value-creating activities.

  - As normal returns are not subject to taxation under an excess profits approach if it is applied as a stand-alone rule, this approach could potentially create incentives to shift normal returns to a CFC in order to escape taxation. However, given that normal returns are defined by reference to equity invested in active assets, this disadvantage may not be unique to an excess profits approach.

  - It is difficult to value the various assets in order to calculate eligible equity. If book value is used, the outcome could be manipulated by transferring assets, and the normal return may overall be inaccurately low. If only certain types of assets give rise to eligible equity, intragroup arrangements could be used to generate those types of assets, and it may be difficult to determine which assets fit the definition of eligible assets.

  - If the excess profits approach is combined with a substance-based exclusion, it will be less simple and mechanical as the exclusion will add the related complexities of a substance-based analysis.

  - An entry criterion that narrows the scope of the excess profits approach may raise classification issues and could mean that it does not attribute all the income that raises BEPS concerns.

**Questions for consultation**

15. Is it clear how the two approaches above would work? If not, what further detail is required to clarify the approach?
16. What practical problems arise with applying the categorical approach and the excess profits approach?
17. How could the practical problems be addressed or mitigated?
18. Which approach is most likely to accurately attribute income that gives rise to BEPS concerns? Is one approach likely to be more effective than the other in terms of dealing with IP income?
19. Could the excess profits approach be applied to income other than IP income and what would be the practical implications of this?
20. What other approaches could be considered for determining excess profits or excess returns?

## IV. Should CFC rules apply an entity or transactional approach?

126. Once income has been determined to be within the definition of income to be caught by a CFC regime, the next question is how CFC rules should attribute that income. Controlled foreign company rules generally take one of two approaches to this question: the entity approach, which attributes income entity-by-entity, and the transactional approach, which attributes individual streams of income. Under the entity approach, an entity that does not earn a certain amount or percentage of attributable income or an entity that engages in certain activities will be found not to have any attributable income, even if some of its income would be of an attributable character.[59] Under the transactional approach, in contrast, the character of each stream of income is assessed to determine whether that stream of income is attributable. The difference between the two approaches is that, under the entity approach, either all or none of the income will be included depending on whether the majority falls within the definition of CFC income. Under the transactional approach, some income can still be included even if the majority does not fall within the definition of CFC income, and some income can be excluded even if the majority does fall within this definition.

127. Best practices would be to apply a transactional approach that looks at specific income streams rather than simply focusing on the entity and effectively treating its income as one block as that is likely to be more accurate at attributing income. However, where countries adopt more mechanical broad-brush rules, an entity approach may be appropriate in that context.

128. Each of these two approaches has multiple advantages and disadvantages. The entity approach reduces administrative burdens because, once tax administrations have determined either that a certain amount of income earned by an entity is attributable or that the entity engaged in a certain activity, CFC rules are either applicable or not and no further analysis needs to be undertaken. The entity approach could also reduce taxpayer compliance costs and increase certainty because taxpayers know that they will only be subject to CFC tax if a significant portion of their income falls within the definition of attributable income. The entity approach thus reduces the chances that a taxpayer will be subject to CFC rules if CFC income makes up only a small portion of its overall income. However the main disadvantage of the entity approach is that, by subjecting either all or none of an entity's income to CFC rules, it is both over-inclusive and under-inclusive. An entity that earns enough CFC income will have all its income attributed (including income that would not otherwise be attributable), while an entity with some income that would otherwise be included may be able to escape CFC rules by swamping that income with income that is not

[59] Although full-inclusion systems can be seen as a version of the entity approach, the difference between entity and transactional approaches is more appropriately discussed in the context of partial-inclusion systems since they are both approaches to determining what entities or income will not be included.

subject to the CFC rules. For example, an entity that engages primarily in activities that generate active income may be able to shield a large amount of passive income from CFC rules.[60]

129. The transactional approach may increase administrative burdens and compliance costs relative to the entity approach, and it may require tax administrations to consider a larger group of companies under their CFC rules, depending on how other elements of those rules are designed. For instance, if CFC rules set too high a threshold when considering if a CFC is lowly taxed and apply a proportionate substance analysis, they may bring a large group of companies with the scope of CFC rules and this may be compounded if they also apply CFC rules on a transactional basis. Despite these disadvantages, the transactional approach is generally more accurate at attributing income. As a transactional approach requires consideration of each stream of income to determine whether it falls within the definition of CFC income it is better able to target specific types of income more effectively than the entity approach. It is also possible to attribute only that income that raises BEPS concerns, and this greater proportionality suggests that the transactional approach may be more consistent with both the goals of Action Item 3 and EU law.[61] Transactional approaches may, however, require a threshold to ensure that active businesses that hold a cash surplus do not have to treat that cash surplus as CFC income. This threshold could be a bright-line de minimis threshold. In Australia, for example, none of the income of a CFC is attributed if 5% or less of that CFC's income is passive income. Alternatively, CFC rules could require a functional analysis to determine how much otherwise attributable income is in fact being held as a cash surplus. The first type of threshold would reduce administrative burdens and compliance costs but may not be accurate in all situations, while the second type of threshold would be more accurate but would increase administrative burdens and compliance costs.[62]

**Questions for consultation**

21. What difficulties or practical problems arise in applying an entity approach or a transactional approach?
22. What concerns arise from the two approaches in terms of administrative burdens and compliance costs?
23. How could these concerns and/or practical problems be dealt with while still ensuring that the CFC rules achieve an accurate result and attribute income that raises BEPS concerns?

60 EU Member States may need to consider whether an entity approach is consistent with EU law.

61 Although the ECJ has not yet considered genuine economic activities on a transaction-by-transaction basis, it appears that CFC rules that attribute income on a transactional basis would be more narrowly focused on income that raises concerns and therefore may be more consistent with EU law.

62 Some jurisdictions combine these two approaches into a hybrid approach and first determine whether an entity has a sufficient amount of attributable income to be treated as a CFC before assessing whether specific items of income are to be attributed. Japan's CFC rules provide an example of such a hybrid approach, under which certain entities are excluded from CFC taxation due to the type of income and activities, but certain streams of income earned by those entities may still be subject to CFC taxation. Because this approach ultimately considers different streams of income rather than just attributing all the income of an entity, it is essentially a version of a transactional approach.

## CHAPTER 6: RULES FOR COMPUTING INCOME

130. This chapter sets out recommendations for the fifth CFC building block on computing income. Once CFC rules have determined that income is attributable, they must then consider how much income to attribute and to whom.

### I. Recommendations

131. Computing the income of a CFC requires two different determinations: (i) which jurisdiction's rules should apply and (ii) whether any specific rules for computing CFC income are necessary. The recommendation for the first determination is to use the rules of the parent jurisdiction to calculate a CFC's income. The recommendation for the second determination is that jurisdictions should have a specific rule limiting the offset of CFC losses so that they can only be used against the profits of the same CFC or against the profits of other CFCs in the same jurisdiction.

### II. Explanation

132. The first recommendation focuses on rules that are used to calculate taxable income. Four options were considered to arrive at the first recommendation.

1. One option would be to apply the law of the parent jurisdiction (i.e., the jurisdiction that is applying the CFC rules), which would be logically consistent with BEPS concerns particularly if CFC rules focus on the erosion of the parent jurisdiction's tax base. This option would also reduce costs for the tax administration. Jurisdictions could achieve a broadly similar outcome by starting with the income calculated according to the rules of the CFC jurisdiction and then adjusting the income in line with the rules of the parent jurisdiction.

2. A second option would be to use the CFC jurisdiction's rules for computing income, but this would be inconsistent with the goals of Action Item 3 as using the CFC jurisdiction's rules may allow for less income to be attributed. This could also create complexity and increase the administration costs for the tax administration that would have to apply unfamiliar rules.

3. A third option would be to allow taxpayers to choose either jurisdiction's computational rules, but this is likely to create opportunities for tax planning.

4. A final option would be to compute income using a common standard. For example, some jurisdictions instruct taxpayers to use the International Financial Reporting Standards (IFRS). The advantage of this option is that it could in theory lead to international consistency as all CFCs and parent jurisdictions would be using the same rules for calculating CFC income, regardless of the residence of either the CFC or the parent. Since most countries do not currently use such standards when calculating taxable income, however, this option may increase both administrative and compliance costs if taxpayers have to recalculate the income of the CFC according to standards that are applied by neither the parent jurisdiction nor the CFC jurisdiction.

133. Based on this analysis, the first option is recommended because it is consistent with the goals of the BEPS Action Plan and it reduces administrative costs.

134. In arriving at the second recommendation, the question of how to treat losses was considered. Most issues involving losses can be addressed by reference to pre-existing domestic laws in the parent jurisdiction.[63] These include questions about whether the use of losses should be limited to offset against profits of a similar character, which would mean that, for example, passive losses of a CFC could only be used against passive profits if that limit applied in domestic laws on losses.

135. Another issue is whether CFC losses should only be offset against CFC profits or whether they can also be used against profits in the parent company. Most existing CFC rules only allow the losses of the CFC to be offset against the profits of CFCs in the same jurisdiction, and this is the recommended approach since allowing CFC losses to be offset against the profits of parent companies or CFCs in other jurisdictions could encourage manipulation of losses in the CFC jurisdiction.[64] However this may not be an issue that is already dealt with in rules that apply in the domestic context, so a separate CFC-specific rule may be required. A rule that prevents CFC losses being set off against non-CFC profits could apply alongside a rule that limits the offset of losses to similar types of profits so that passive losses of a CFC could only be offset against passive profits of that same CFC. Any concerns about over-taxation resulting from this approach could be mitigated by allowing CFC losses to be carried forwards or backwards for use against profits arising in other years.

136. The recommendation on loss limitation can be illustrated with the following example. Parent is a resident in Country A and Sub B is a wholly owned subsidiary in Country B that is a CFC. Country A has CFC rules. In year 1, Parent earns 1000 and Sub B earns 500 of CFC income. Parent has 200 in losses and Sub B has 1000 in losses. This is illustrated in Figure 6.

**Figure 6. Loss limitation**

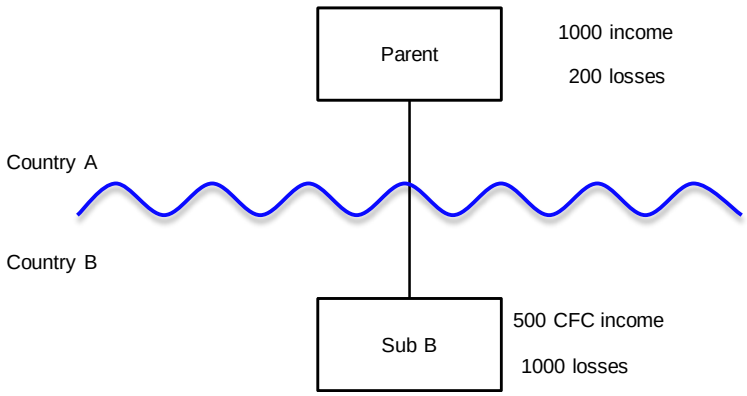


63 Using domestic law provisions to answer questions about the treatment of specific items such as losses would create complications if CFC income is generally calculated using the laws of a different jurisdiction but this is another reason supporting the use of the parent jurisdiction's rules and the first recommendation above.

64 Jurisdictions could also implement rules permitting parent company losses to be used against CFC profits. This situation is less likely to raise BEPS concerns since this would lead to fewer losses in the parent company and fewer profits in the CFC.

137. If Country A's CFC rules do not limit the losses of Sub B to the income of Sub B, then Parent will only be taxed on 300 because the full 1200 of losses will be offset against the full 1500 of income. If, however, Country A's CFC rules do limit the losses of Sub B to the income of Sub B, then Parent will be taxed on 800 (1000-200), and no income will be attributed to Parent from Sub B because all of Sub B's attributable income will be offset by the losses, and the remaining 500 can be carried forward to be used against Sub B's future income. This limit will prevent use of CFCs to reduce the taxable income in the parent jurisdiction.

138. If Country A already has a rule that limits passive losses to passive income, this rule can be combined with the recommended loss limitation as shown in Figure 7.

**Figure 7. Loss limitation with pre-existing passive limitation**

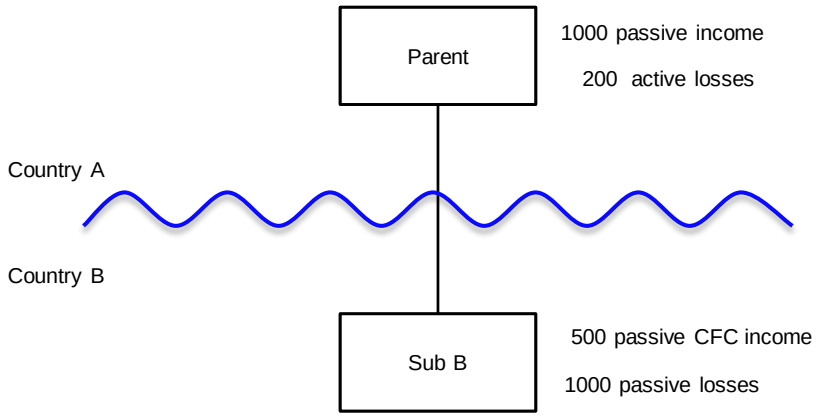


139. If all of Parent's income is passive and all of Parent's losses are active, while all of Sub B's income and losses are passive, Parent would be taxed on 1000 of its income. This is because Parent's active losses could not be used against its passive income and because Sub B's passive losses would offset all of its passive income, and the excess passive losses could not be used to offset Parent's income under the CFC loss limitation rule.

140. Another concern is potential loss importation. This concern could arise if a CFC has losses that date from before its characterisation as a CFC or if another activity bearing losses is transferred to the CFC to soak up profits. If losses are only available to be offset against CFC profits then the fact that the CFC incurred losses in prior years may not be a problem. However, there may be concerns if the activity of the CFC has changed and there is evidence that either profits or losses have been shifted to the CFC to reduce the amount of income that is ultimately taxed. Many countries have domestic law provisions designed to prevent tax avoidance that deal with these situations and these could equally be applied to the CFC's computation of income.

**Questions for consultation**

24. Do the rules on computing the income of a CFC present any difficulties in practice? If so, what are these and how could they be dealt with?

25. Does this chapter accurately reflect the issues that could arise with losses or are there any other situations that need to be considered?

## CHAPTER 7: RULES FOR ATTRIBUTING INCOME

141. This chapter sets out recommendations for the sixth CFC building block on attributing income. Once the amount of CFC income has been calculated, the next step is determining how to attribute that income to the appropriate shareholders in the CFC.

### I. Recommendations

142. Income attribution can be broken into five steps: (i) determining which taxpayers should have income attributed to them, (ii) determining how much income should be attributed, (iii) determining when the income should be included in the returns of the taxpayers, (iv) determining how the income should be treated, and (v) determining what tax rate should apply to the income.

143. The recommendations for these steps are as follows:

i) the attribution threshold should be tied to the minimum control threshold when possible, although countries can choose to use different attribution and control thresholds depending on the policy considerations underlying CFC rules.

ii) that the amount of income to be attributed to each shareholder or controlling person should be calculated by reference to both their proportion of ownership and their actual period of ownership or influence.

iii) and iv) that jurisdictions can determine when income should be included in taxpayers' returns and how it should be treated so that CFC rules operate in a way that is coherent with existing domestic law.

v) to apply the tax rate of the parent jurisdiction to the income.[65]

### II. Explanation

144. In arriving at the above recommendations, each of the five steps was considered in greater detail.

#### *A. Which taxpayers should income be attributed to?*

145. In order to attribute income correctly, jurisdictions must first determine to whom the income is to be attributed. Many existing CFC rules tie this determination to the earlier determination of control, so that, if a taxpayer met the minimum control threshold, then that taxpayer would also have income attributed to it. In jurisdictions that apply a concentrated ownership rule, CFC income is generally attributed not just to taxpayers who meet the overall control threshold but also to all resident taxpayers who have the minimum level of control (e.g., 10%) to be considered when calculating whether the control threshold has been met. The benefits of tying the attribution threshold to the minimum control threshold include administrative simplicity and reduced compliance burdens. However, using control rules to determine attribution could potentially lead to under-inclusion if it is believed that a minority ownership could in fact have sufficient influence over the business

[65] To limit competitiveness concerns, countries could also consider a top-up tax. This may be more appropriate where a more approximate or mechanical rule could potentially capture active income.

decisions of a CFC to raise BEPS concerns, but this disadvantage can be reduced if the control rules aggregate the interests of minority shareholders or otherwise do not limit control to majority owners.

146. Some CFC rules may, however, use a different rule to determine which taxpayers have CFC income attributed to them, based on the theory that the amount of ownership that is sufficient for control may not be the same as the level that is sufficient for attribution. Jurisdictions that want to deter even minority investments in CFCs may use a lower attribution threshold, while those that are instead focused on deterring investments by residents that can influence the CFC may set their attribution threshold higher than their control threshold, particularly if their control threshold considers concentrated ownership. Further, CFC rules that look at de facto control or otherwise establish control in a less mechanical way may need to have different control and attribution tests to ensure that the correct taxpayers have income attributed to them. Although having separate rules for attribution and control may in theory create additional compliance costs or administrative burdens, actual attribution of profits may only occur relatively infrequently due to the deterrent nature of CFC rules. Best practice would therefore be either to tie the attribution threshold to the control threshold or to use another attribution threshold that attributed income to, at a minimum, taxpayers who could influence the CFC.

### *B. How much income should be attributed?*

147. Once CFC rules have determined which taxpayers will have income attributed to them, they must then determine how much of that income to attribute. All existing CFC rules attribute income in proportion to each taxpayer's ownership, but they differ in how they treat taxpayers whose ownership lasted for only a portion of the year. Some jurisdictions attribute the entire portion of income based on ownership on the last day of the year. Whilst this could lead to inaccurate attribution and could create opportunities for tax planning, this may accurately capture whether or not the taxpayer was able to influence the CFC if voting or other power is determined based on ownership on the last day of the year. Other jurisdictions attribute income based on the period of ownership, which results in taxpayers being taxed on an amount that is similar to their actual share of the CFC profits. In addition, applying such a rule appears unlikely to add significant compliance costs in practice.[66] Either of these approaches to determining how much income should be attributed can qualify as best practice so long as the determination based on the last day of the year accurately captures the taxpayer's influence.[67]

### *C. When should the income be included in tax returns?*

148. Many existing CFC rules specify that the attributed income must be included in the taxpayer's taxable income for the taxable year in which the end of the CFC's accounting period ends, although some countries have slightly different rules for determining the year in which the attributed income should be included. Korea's CFC rules, for example, state that the attributed income will be included on the return for the taxable year to which the 60th day from the end of the CFC's fiscal year belongs. Both approaches seem equally effective at combatting BEPS, so there is no recommendation for this step and countries are free to adopt provisions that ensure that CFC rules are coherent with general domestic law provisions.

---

66 It is assumed that such a rule would attribute income if the taxpayer held an interest in the CFC for a portion of the year but did not hold that interest on the last day of the year. If not, the recommended rule could be combined with a rule for imputing CFC income when CFC shares are disposed of in the middle of the year.

67 One possible way of capturing influence would be to combine a rule that considers ownership on the last day of the year with reporting requirements on ownership throughout the year.

### *D. How should the income be treated?*

149. A further question to be answered when attributing income to taxpayers is how that income will be treated in the parent jurisdiction. Existing CFC rules take several different approaches, including treating attributed income as a deemed dividend or treating it as having been earned by the taxpayer directly (i.e., the CFC is essentially treated as a partnership or flow-through entity but only for the purposes of attributing CFC income). If attributed income is treated as a deemed dividend, then the tax treatment can build on existing dividend rules with which taxpayers and tax administrations are already familiar. However jurisdictions may not want to treat attributed income as a deemed dividend for all tax purposes and therefore the limit of any "deeming" will need to be made clear. In contrast, treating attributed income as if it were earned directly by shareholders of the CFC is likely to reduce the need for any separate characterisation rules since the income will be characterised according to existing domestic rules. Both approaches seem equally appropriate in terms of dealing with BEPS and therefore the question of how to treat attributed income could be left for jurisdictions to decide in a manner that is coherent with domestic law.

### *E. What tax rate should apply to CFC income?*

150. Finally, attribution of income raises the question of how that income is taxed once it is attributed. Whilst existing CFC rules subject CFC income to taxation at the rate that would apply to the parent company in the parent jurisdiction, a second option would be to apply a "top-up tax". A top-up tax, which builds closely on the concept of a minimum tax, would only subject CFC income to the difference between the tax paid and a set threshold. This threshold could be tied to the low-tax threshold used to determine whether CFC rules apply to a given CFC, or it could be an entirely separate threshold. A top-up tax would set a floor for the rate at which CFC income is taxed.

151. To illustrate how a top-up tax could work, imagine a parent jurisdiction with a flat 30% statutory tax rate and a CFC rule that applied only to CFCs that were subject to an effective tax rate of less than 12%. If the parent jurisdiction applied a top-up tax to a CFC that was subject to a 0% effective tax rate, it would only tax the CFC income at 12%, instead of its normal rate of 30%. This approach could mean that MNCs located in higher-tax jurisdictions with CFC rules would not be at a competitive disadvantage relative to MNCs located in some lower-tax jurisdictions. However, they would remain at a competitive disadvantage compared to both MNCs located in jurisdictions with CFC rules but with a tax rate below the top-up tax rate and MNCs located in jurisdictions without CFC rules. It would also in theory be consistent with the principle of targeting those CFC structures most likely to represent base erosion and profit shifting. However, the top-up tax would not necessarily eliminate incentives to shift profits away from higher tax jurisdictions. For instance, in the example above, MNCs located in the parent jurisdiction would have a considerable incentive to shift their income into the CFC jurisdiction because the maximum rate at which they would be taxed on their CFC income would be 12%, so 18% lower than the rate that would apply if their income were earned in the parent jurisdiction. Consequently using a top-up tax rate instead of the main tax rate could reduce the deterrent effect of CFC rules. The top-up tax also may not be consistent with CFC rules designed to achieve broader policy goals or to address deferral more generally, and it may add some complexity to the tax rules of the parent jurisdiction.

152. The top-up tax may therefore not be appropriate in all situations, but it could be seen as a middle way that would enable jurisdictions to address some degree of competitiveness concerns. If the level set for the top-up tax rate was the same as that as the low-tax threshold, it may also make CFC rules more internally consistent.

**Questions for consultation**

26. What difficulties, if any, arise under existing CFC provisions for attributing income?
27. Does the description of a top-up tax set out all the advantages and disadvantages of such an approach?

## CHAPTER 8: RULES TO PREVENT OR ELIMINATE DOUBLE TAXATION

153. This chapter sets out recommendations for the seventh and final CFC building block on rules to prevent or eliminate double taxation. As discussed in Chapter 1, one of the fundamental policy considerations raised by CFC rules is how to ensure that these rules do not lead to double taxation, which could pose an obstacle to international competitiveness, growth and economic development.

### I. Recommendations

154. Jurisdictions are primarily concerned with at least three situations where double taxation may arise: (i) situations where the attributed CFC income is also subject to foreign corporate taxes, (ii) situations where CFC rules in more than one jurisdiction apply to the same CFC income, and (iii) situations where a CFC actually distributes dividends out of income that has already been attributed to its resident shareholders under the CFC rules or a resident shareholder disposes of the shares in the CFC. However, double taxation concerns could arise in other situations, for instance where there has been a transfer pricing adjustment between two jurisdictions and a CFC charge arises in a third jurisdiction.[68]

155. The recommendation for addressing the first two situations is to allow a credit for foreign taxes actually paid, including CFC tax assessed on intermediate companies. The recommendation for addressing the third situation is to exempt dividends and gains on disposition of CFC shares from taxation if the income of the CFC has previously been subject to CFC taxation, but the precise treatment of such dividends and gains can be left to individual jurisdictions so that provisions are coherent with domestic law.

### II. Explanation

156. Generally, relief for double taxation can be granted in three different ways, all of which were considered in arriving at the above recommendations. These three approaches allow the resident shareholder (i) to set off the foreign tax against residence tax (credit method), (ii) to deduct the foreign tax as a business expense (deduction method) or (iii) to reduce the attributable CFC income by the amount that has already been subject to regular corporate taxation in another jurisdiction (exemption method). These three approaches were considered in the context of each of the three situations outlined above, and they are described briefly below.

#### *A. Issues with respect to relief for foreign corporate taxes*

157. Perhaps the most obvious situation where the application of CFC rules may lead to double taxation is the one mentioned above under point (i) above, where the CFC income is subject to corporate taxes in the CFC jurisdiction as well as to CFC taxation in the parent or controlling parties' jurisdiction.

158. Most jurisdictions address the situation where the CFC income is subject to taxation in both the CFC jurisdiction and the parent jurisdiction by providing for an indirect foreign tax credit that credits taxes

[68] In certain circumstances, the interaction of CFC rules and transfer pricing rules could give rise to double taxation issues. Whilst such circumstances may not be common, it is important that countries rules contain provisions to eliminate any double taxation that would otherwise result.

that were incurred by a different taxpayer. This approach eliminates double taxation more comprehensively than the deduction method as it directly sets off the foreign tax against domestic tax rather than reducing the tax base to which the residence tax applies. Given that the purpose of a CFC regime is to assert taxing rights over income that has been shifted to a low or no tax jurisdiction, the exemption method is not an appropriate method for granting relief in this context since it would undermine the application of CFC rules. An indirect foreign tax credit is generally limited to the amount of effective double taxation. This is addressed in most countries' rules by limiting relief to the lesser of the domestic tax or the foreign tax actually paid. The focus on the actual tax paid ensures that relief is not given if the foreign tax is subject to a refund or reimbursement claim.

### *B. Issues with respect to relief for CFC taxation in multiple jurisdictions*

159. Additional issues may arise when the income and profits arising in a CFC are taxed under the CFC rules operating in more than one jurisdiction, and this scenario may become more common after the publication of the final report on Action Item 3. If, for example, a subsidiary is treated as a CFC under the rules operating in multiple jurisdictions, then the subsidiary's income could potentially be taxed by the CFC jurisdiction and by any other jurisdiction that considers the subsidiary to be a CFC. Again an indirect foreign tax credit could be applied in this situation but in order to provide such a credit countries may need to change their double taxation relief provisions in order for CFC tax paid in an intermediate country to qualify as a foreign tax eligible for relief. There should also be a hierarchy of rules to determine which countries should have priority, and this hierarchy could prioritise the CFC rules of the jurisdiction whose resident shareholder is closer to the CFC in the chain of ownership.

160. This rule hierarchy is illustrated in the example below.

**Figure 8. Interaction of CFC rules**

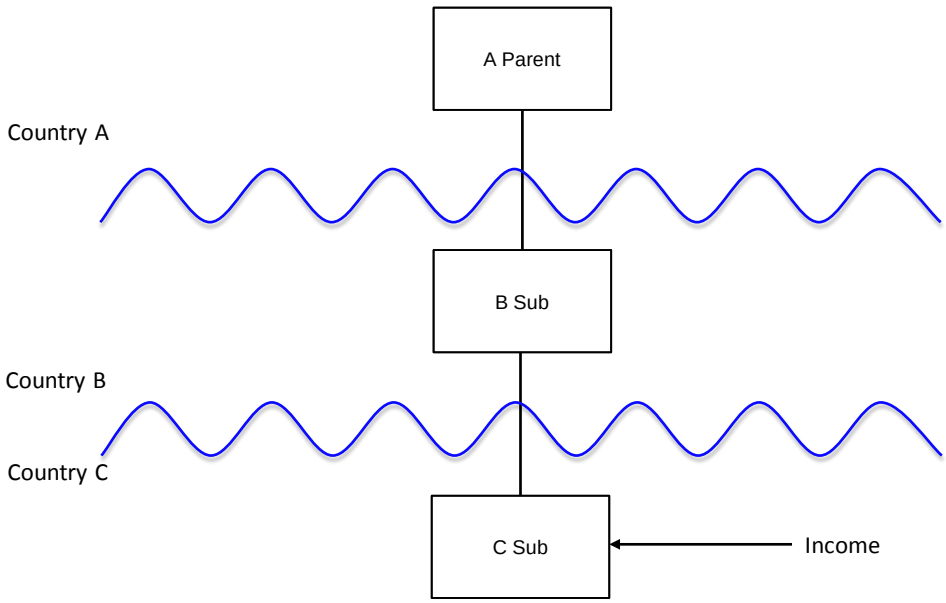


161. In this situation, C Sub is both a direct CFC of B Sub and an indirect CFC of A Parent, and B Sub is also a CFC of A Parent. If both Country A and Country B have CFC rules, there must be a rule hierarchy to determine which country's CFC rules will apply first.

162. Figure 8 could raise two different issues, depending on the tax rates of Country A and Country B. If Country C has a tax rate of 10%, Country B has a tax rate of 20%, and Country A has a tax rate of 30%, then both Country B and Country A will want to collect their full amount of tax, potentially only giving a credit for Country C's tax. If the income of C Sub is 100, this would mean that Country A would want to collect 20 (i.e., 30 minus 10) and Country B would want to collect 10 (i.e., 20 minus 10). The rule hierarchy suggested above, where Country B's rules apply prior to Country A's rules, would require that Country A provide a tax credit for taxes paid to both Country C and Country B. This would mean that Country C would collect 10, Country B would collect 10 (i.e., 20 minus 10), and Country A would also collect 10 (i.e., 30 minus 20).

163. If, in contrast, Country C still has a tax rate of 10% and Country A still has a tax rate of 30%, but Country B has a tax rate of 40%, then Country A would no longer collect any taxes if it granted a tax credit for taxes paid to Country B. Although this may raise concerns from the perspective of Country A, this is likely to be consistent with the principle underlying Country A's CFC rules as C Sub would be fully taxed on its income at a tax rate greater than that in Country A. Also, if Country B has a tax rate that is higher than the tax rate in Country A, it is less likely that the tax base that has been eroded is that of Country A. It is more likely that in this situation, if it were to exist, it would be Country B's tax base that was being eroded. It would therefore be appropriate for Country A not to apply its CFC rules if the profits of C Sub are taxed at an equivalent or higher effective tax rate in the jurisdiction of an intermediate party. The recommended rule hierarchy in both situations is therefore for Country A to apply its CFC rules only after Country B has applied its CFC rules (or to provide a credit for CFC taxes paid to Country B, which may be simpler).

### *C. Relief for subsequent dividends and capital gains*

164. The third situation in which CFC taxation could lead to double taxation is where (1) the CFC actually makes distributions out of the CFC income or (2) resident taxpayers of a CFC dispose of their CFC shares. With regards to the first scenario, most jurisdictions provide some type of relief for subsequent dividends paid by a CFC. In the majority of these jurisdictions, the dividends will qualify for the regular participation exemption for foreign dividends. If CFC rules require a level of control that is at least equal to the same percentage of shareholding as the participation exemption, then the participation exemption is likely to apply. Therefore an additional relief provision will only be necessary if there is no participation exemption or the participation exemption does not apply. In these cases, most jurisdictions apply a separate provision that also exempts the dividends even if they do not qualify for the normal participation exemption (or if there is no general participation exemption).

165. There may however be difficulties with the exemption method if only part of the CFC income has been attributed to a resident taxpayer or if a CFC is indirectly held through another non-resident company which does not have attributable CFC income. In these cases it may be hard to determine whether dividends have, in fact, been paid out of attributed CFC income and are therefore subject to double taxation. To address these difficulties, countries tend to adopt relatively mechanical approaches that assume that dividends are likely to have been paid out of previously attributed CFC income. These approaches include, for example, limiting the dividend exemption to the amount of profits generated by the CFC during the tax years when CFC rules have applied.

166. A further issue that arises with regards to the first scenario occurs when the CFC jurisdiction applies withholding taxes when the dividend is paid out. Since these withholding taxes represent income taxation at the level of the CFC jurisdiction, it may be appropriate to provide a refund for CFC taxes paid equal to the amount of withholding tax if the dividend was paid out of profits that were subject to CFC tax, since this would essentially be equal to a credit had the CFC jurisdiction imposed tax on the income itself.

167. With regards to the second scenario, double taxation may also arise where the shares of a CFC are disposed of and the taxpayer holding the shares has previously been taxed on undistributed income of the CFC. Following the logic above in respect of dividends, countries may choose not to tax subsequent gains realised by a taxpayer in respect of the shares of a CFC to the extent that the same amounts have previously been taxed under CFC rules operating in the taxpayer's jurisdiction. However, given countries' different approaches to taxing gains on assets, the mechanism for providing relief is likely to vary to accommodate the specific tax features in each jurisdiction, and this recommendation does not mean that countries that do not otherwise exempt gains on disposition should change their overall rules to comply with this recommendation for CFC rules.

168. The discussion draft recognises that double taxation can also arise in other ways, for instance through the interaction of CFC rules and transfer pricing rules. These are not new issues but countries will need to consider whether their existing double taxation relief provisions are effective in relieving all instances of double tax.[69]

**Questions for consultation**

28. Are there any other double taxation issues that arise in the context of CFC rules that are not dealt with here?
29. What administrative or practical difficulties arise currently in respect of double tax relief rules and how could these be mitigated or dealt with?

[69] For example Parent A resident in Country A owns two subsidiaries, Sub B resident in Country B and Sub C resident in Country C. A transfer pricing adjustment is made between B and C resulting in higher profits in C. If Country A applies its CFC rules to both B and C it will need to give relief for the reduced foreign tax paid in B and the increased tax paid in C. In practice it seems more likely that where there are transfer pricing adjustments they will decrease the profits of a CFC and increase the profits of a more highly taxed subsidiary that is outside the scope of CFC rules. Therefore countries will need to be aware of any subsequent adjustments to the tax paid by a CFC to ensure that they do not provide relief for tax that has been repaid.

## ANNEX I – DE MINIMIS THRESHOLDS

| Country | CFC rules do not apply if … | | Safeguards against circumvention |
|---|---|---|---|
| | gross attributable income of the CFC (or the gross turnover it is based on)… | total taxable profits of the CFC… | |
| **Australia** | … does not exceed the lesser of 50,000 AUD or 5 percent of the CFC's gross turnover also provided that CFC is in white list country. | | |
| **Canada** | … is less than 5,000 CAD. | | |
| **China** | | … are less than 5,000,000 RMB. | |
| **Germany** | …does not exceed 10% of the total gross turnover provided that CFC's attributable income or the attributed CFC income at the level of the shareholder does not exceed 80,000 €. | | De minimis threshold does not apply, unless all CFC income (including income from several CFCs) that is attributable to one shareholder does not exceed 80,000 €. |
| **Korea** | | … do not exceed 200,000,000 KRW. | |
| **Spain** | … represents less than 15% of the total income of the CFC. However, for some of the CFC income the de minimis threshold does not apply and is, thus, always subject to the application of CFC rules. | | |
| **United Kingdom** | | … do not exceed 50,000 GBP, or do not exceed 500,000 GBP and non-trading profits do not exceed 50,000 GBP. The threshold relates to both total taxable and accounting profits. | De minimis does not apply, if:<br>• one of main purposes of an arrangement is to secure the low profit exemption or<br>• CFC provides UK intermediary services or<br>• low profit is result of hybrid arrangement |
| **United States** | … is less than the lesser of 5% of the total gross income of the CFC or 1,000,000 $. | | Anti-fragmentation rule with rebuttable presumption that treats income of multiple CFCs as single entity income if CFCs are related. |

## ANNEX II - LOW TAXATION THRESHOLDS

| Country | Determination of low taxation threshold[70] | White list/black list as a communication tool |
|---|---|---|
| **Australia** | There is no low-tax threshold. However, the rules do not apply if tax system in CFC jurisdiction as a whole is comparable to Australian tax system. | White list with countries whose tax system is comparable to Australia's tax system |
| **China** | *Effective tax rate (ETR) of CFC*[71] is less than 50% of the statutory tax rate in parent/shareholder's | White list including countries that are not considered low tax countries |
| **Finland** | *ETR of CFC* less than 3/5 of ETR had the CFC income been calculated in accordance with Finnish GAAP and tax rules | Grey list consisting of tax treaty countries excluding EU Member States where the foreign tax is on average lower than 75% of the statutory tax rate in Finland or where tax incentives are applied. |
| **France** | The amount of tax paid by the CFC less than 50% of the amount of tax that would have been paid under French rules. | N/A |
| **Germany** | *ETR of CFC* less than fixed rate of 25% | N/A |
| **Japan** | *ETR of CFC* is less than fixed rate of 20% | N/A |
| **Korea** | *ETR of CFC* does not exceed fixed tax rate of 15% | N/A |
| **Mexico** | *ETR of CFC* is less than 75% of Mexico's statutory tax rate | N/A |
| **Norway** | *ETR of CFC* is less than 2/3 of ETR had the CFC income been calculated in accordance with Norwegian tax rules | Black list for countries that are considered low tax countries; white list countries excluded from CFC application, unless CFC primarily income from dividends and capital gains from low tax countries |

70 The determination of the low tax threshold is based on a comparison between either a fixed rate or a portion of the effective tax rate had the attributable income been calculated in accordance with the rules in the jurisdiction applying the CFC rules.

71 Most jurisdictions calculate the ETR of the CFC by dividing the tax amount paid by the CFC through the CFC income calculated in accordance with the rules of the parent/shareholder's jurisdiction. At least one jurisdiction uses as a starting point the tax base as calculated under the tax law of the CFC jurisdiction and, then, makes necessary adjustments according to its own tax rules.

| Country | Determination of low taxation threshold[70] | White list/black list as a communication tool |
|---|---|---|
| **Spain** | *ETR of CFC* is less than 75% of ETR had the CFC income been calculated in accordance with Spanish tax rules | N/A |
| **Sweden** | *ETR of CFC* is less than 55% of ETR had the CFC income been calculated in accordance with Swedish rules | Different lists based on whether a country has (1) ordinary tax system or not or (2) has ordinary tax system, but certain income is subject to preferential tax rate |
| **United Kingdom** | *ETR of CFC* is less than 75% of ETR had the CFC income been calculated in accordance with UK tax rules | White list in form of an excluded territory exemption broadly includes countries with a headline tax rate of more than 75% of the main UK corporation tax rate, provided their income within certain categories does not exceed the greater of 10% of the company's pre-tax profits or 50,000 GBP and provided that certain other conditions are met. |

## ANNEX III - DEFINITIONS OF INSURANCE INCOME

| Country | Over-capitalisation | Related party transactions | Residence of policyholder, annuitant, or beneficiary /source of the risks insured | Lack of genuine substantial insurance activity |
|---|---|---|---|---|
| **Australia** | N/A | N/A | Insurance income, if counterparty/insured risk in Australia | N/A |
| **Germany** | N/A | Insurance income is attributable if the CFC conducts the insurance business primarily with related parties | N/A | Income from the business of insurance is not attributable if the CFC uses a proper business installation, unless the CFC conducts the insurance business predominantly with related parties |
| **United Kingdom** | Profits from the investment of UK excess capital contributions | Insurance income derived from contracts with UK related parties | Insurance income derived from contracts with UK related parties or UK PE of non-UK related parties | Underwriting risk and functions in the UK and not in the CFC |
| **United States** | N/A | Insured, annuitant or beneficiary is related party | CFC derives more than a threshold amount of net written premiums from contracts covering risks outside CFC jurisdiction or risks sourced in the US | Insurance income related to third country risks is captured, if CFC does not meet substantial activity requirement |

## ANNEX IV - QUESTIONS FOR CONSULTATION

### Chapter 2: Definition of a CFC

1. Would any particular practical issues arise from treating transparent entities as separate entities in the cases listed above? If so, what are they and how could they be dealt with?
2. Should the recommendations consider any other issues related to determining which entities could be considered to be CFCs?
3. Are there any practical problems with either the narrow or the broad version of the modified hybrid mismatch rule mentioned above?

### Chapter 3: Threshold Requirements

4. What practical problems, if any, arise when applying a low-tax threshold based on an effective tax rate calculation?
5. How could these problems be addressed or mitigated?
6. Does the discussion above correctly address the situation of permanent establishments that are subject to a different tax rate than CFCs?

### Chapter 4: Definition of control

7. What practical problems, if any, arise when applying a control test?
8. Are there particular practical problems that arise when applying a control test that considers interests held by unrelated or non-resident parties? If so, what are they, and how can they be dealt with?

### Chapter 5: Definition of CFC Income

9. What are the practical problems with any of the three substance analyses set out above? How could these practical problems be dealt with?
10. Do you have experience with applying substance analyses in existing CFC rules? If so, how can these be made more mechanical while still accurately attributing income?
11. How can CFC rules accurately attribute income that raises concerns about BEPS (i) in a business that is licensed under an appropriate regulatory body and is market-facing in a particular jurisdiction, (ii) in a reinsurance business carried on by a CFC of a multinational insurance group or (iii) in a “captive” insurance business of a CFC that is not part of an insurance group? Are there practical problems with current rules that distinguish between these two situations? If so, what are they and how can they be dealt with?
12. Are there practical problems with applying the same rule to sales and services income and IP income?

13. Are there existing CFC rules that accurately attribute any or all of these categories of income while also reducing administrative and compliance burdens?

14. Does the discussion above consider all categories of income that should be attributed under CFC rules?

15. Is it clear how the two approaches above would work? If not, what further detail is required to clarify the approach?

16. What practical problems arise with applying the categorical approach and the excess profits approach?

17. How could the practical problems be addressed or mitigated?

18. Which approach is most likely to accurately attribute income that gives rise to BEPS concerns? Is one approach likely to be more effective than the other in terms of dealing with IP income?

19. Could the excess profits approach be applied to income other than IP income and what would be the practical implications of this?

20. What other approaches could be considered for determining excess profits or excess returns?

21. What difficulties or practical problems arise in applying an entity approach or a transactional approach?

22. What concerns arise from the two approaches in terms of administrative burdens and compliance costs?

23. How could these concerns and/or practical problems be dealt with while still ensuring that the CFC rules achieve an accurate result and attribute income that raises BEPS concerns?

**Chapter 6: Rules for computing income**

24. Do the rules on computing the income of a CFC present any difficulties in practice? If so, what are these and how could they be dealt with?

25. Does this chapter accurately reflect the issues that could arise with losses or are there any other situations that need to be considered?

**Chapter 7: Rules for attributing income**

26. What difficulties, if any, arise under existing CFC provisions for attributing income?

27. Does the description of a top-up tax set out all the advantages and disadvantages of such an approach?

**Chapter 8: Rules to prevent or eliminate double taxation**

28. Are there any other double taxation issues that arise in the context of CFC rules that are not dealt with here?

29. What administrative or practical difficulties arise currently in respect of double tax relief rules and how could these be mitigated or dealt with?